SAMSUNG

GSM TELEPHONE
SGH-P300

SERVICE Manual

GSM TELEPHONE

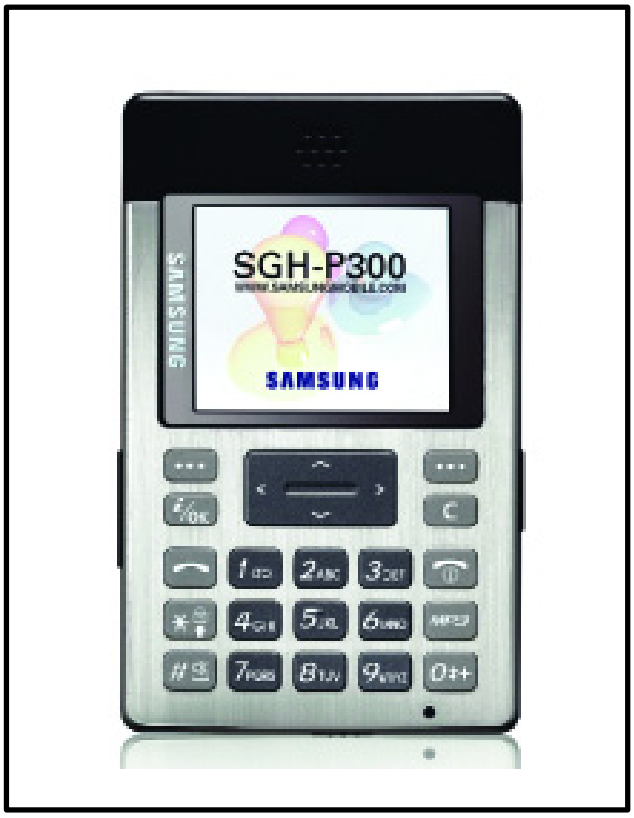

CONTENTS

1. Specification
2. Flow Chart of Troubleshooting
3. Exploded Views and Parts List
4. Electrical Parts List
5. PCB Diagrams
6. Block Diagrams

1. SGH-P300 Specification

1-1. GSM General Specification

	GSM900 Phase 1	EGSM 900 Phase 2	DCS1800 Phase 1	PCS1900
Freq. Band[MHz] Uplink/Downlink	890~915 935~960	880~915 925~960	1710~1785 1805~1880	1850~1910 1930~1990
ARFCN range	1~124	0~124 & 975~1023	512~885	512~810
Tx/Rx spacing	45MHz	45MHz	95MHz	80MHz
Mod. Bit rate/ Bit Period	270.833kbps 3.692us	270.833kbps 3.692us	270.833kbps 3.692us	270.833kbps 3.692us
Time Slot Period/Frame Period	576.9us 4.615ms	576.9us 4.615ms	576.9us 4.615ms	576.9us 4.615ms
Modulation	0.3GMSK	0.3GMSK	0.3GMSK	0.3GMSK
MS Power	33dBm~13dBm	33dBm~5dBm	30dBm~0dBm	30dBm~0dBm
Power Class	5pcl ~ 15pcl	5pcl ~ 19pcl	0pcl ~ 15pcl	0pcl ~ 15pcl
Sensitivity	-102dBm	-102dBm	-100dBm	-100dBm
TDMA Mux	8	8	8	8
Cell Radius	35Km	35Km	2Km	-

SAMSUNG Proprietary-Contents may change without notice
This Document can not be used without Samsung's authorization

1-2. GSM Tx Power Class

TX Power control level	GSM900
5	33±2 dBm
6	31±2 dBm
7	29±2 dBm
8	27±2 dBm
9	25±2 dBm
10	23±2 dBm
11	21±2 dBm
12	19±2 dBm
13	17±2 dBm
14	15±2 dBm
15	13±2 dBm
16	11±3 dBm
17	9±3dBm
18	7±3 dBm
19	5±3 dBm

TX Power control level	DCS1800
0	30±3 dBm
1	28±3 dBm
2	26±3 dBm
3	24±3 dBm
4	22±3 dBm
5	20±3 dBm
6	18±3 dBm
7	16±3 dBm
8	14±3 dBm
9	12±4 dBm
10	10±4 dBm
11	8±4dBm
12	6±4 dBm
13	4±4 dBm
14	2±5 dBm
15	0±5 dBm

TX Power control level	PCS1900
0	30±3 dBm
1	28±3 dBm
2	26±3 dBm
3	24±3 dBm
4	22±3 dBm
5	20±3 dBm
6	18±3 dBm
7	16±3 dBm
8	14±3 dBm
9	12±4 dBm
10	10±4 dBm
11	8±4dBm
12	6±4 dBm
13	4±4 dBm
14	2±5 dBm
15	0±5 dBm

SAMSUNG Proprietary—Contents may change without notice
This Document can not be used without Samsung's authorization

2-1.Baseband

2-1-1. Power ON

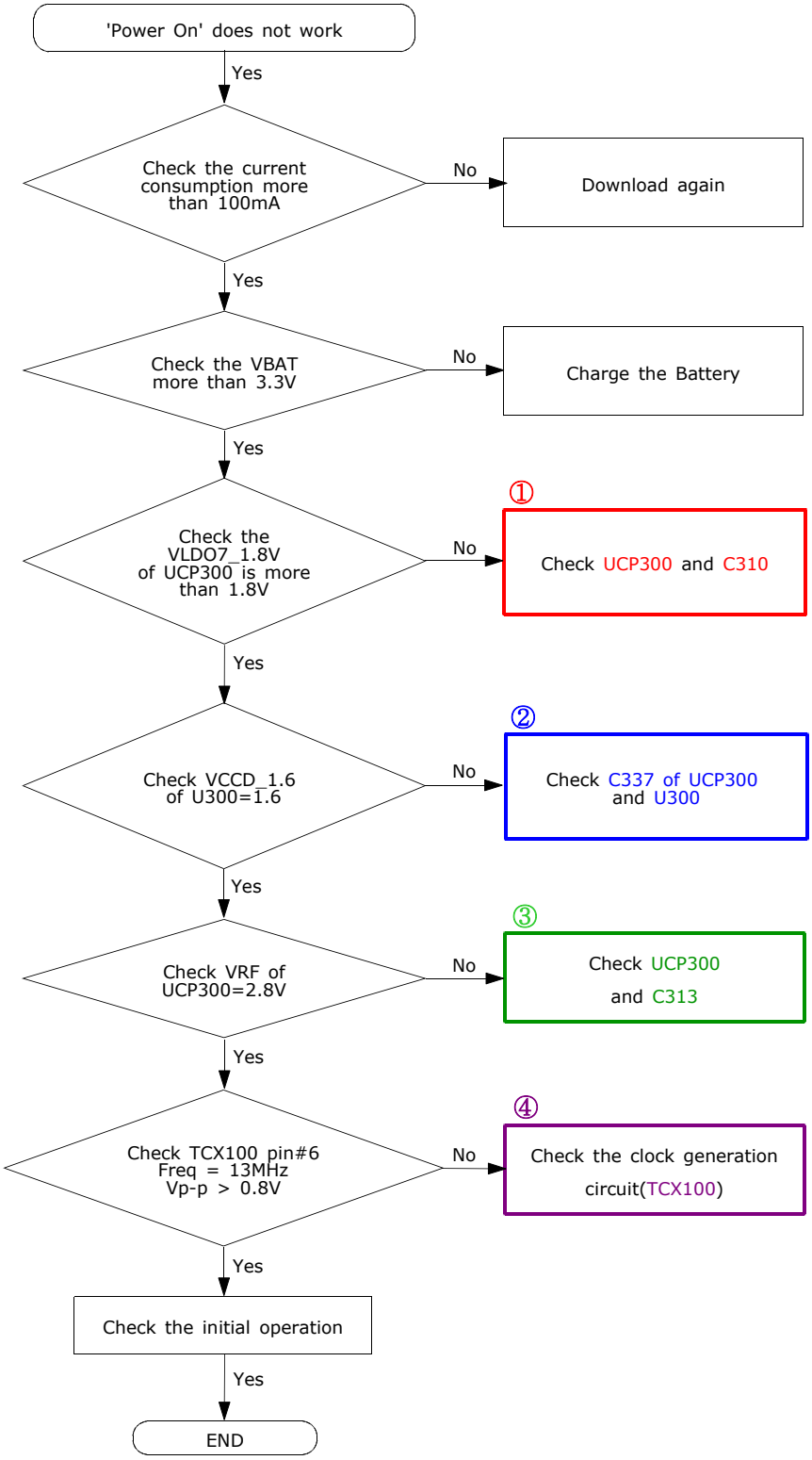

SAMSUNG Proprietary-Contents may change without notice
This Document can not be used without Samsung's authorization

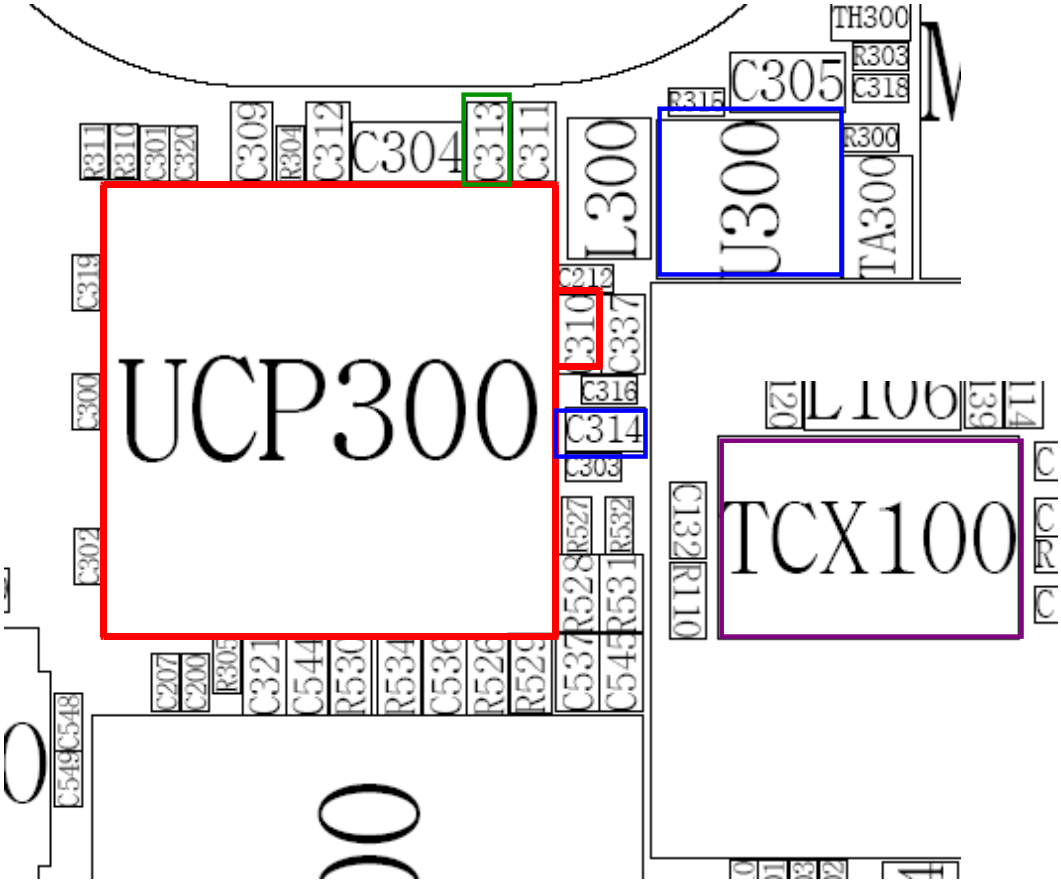

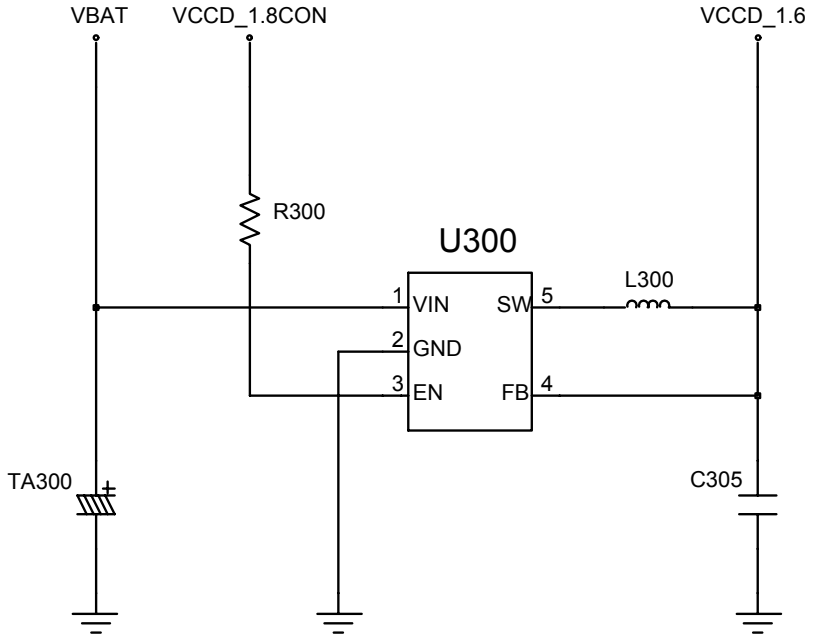

SAMSUNG Proprietary-Contents may change without notice
This Document can not be used without Samsung's authorization

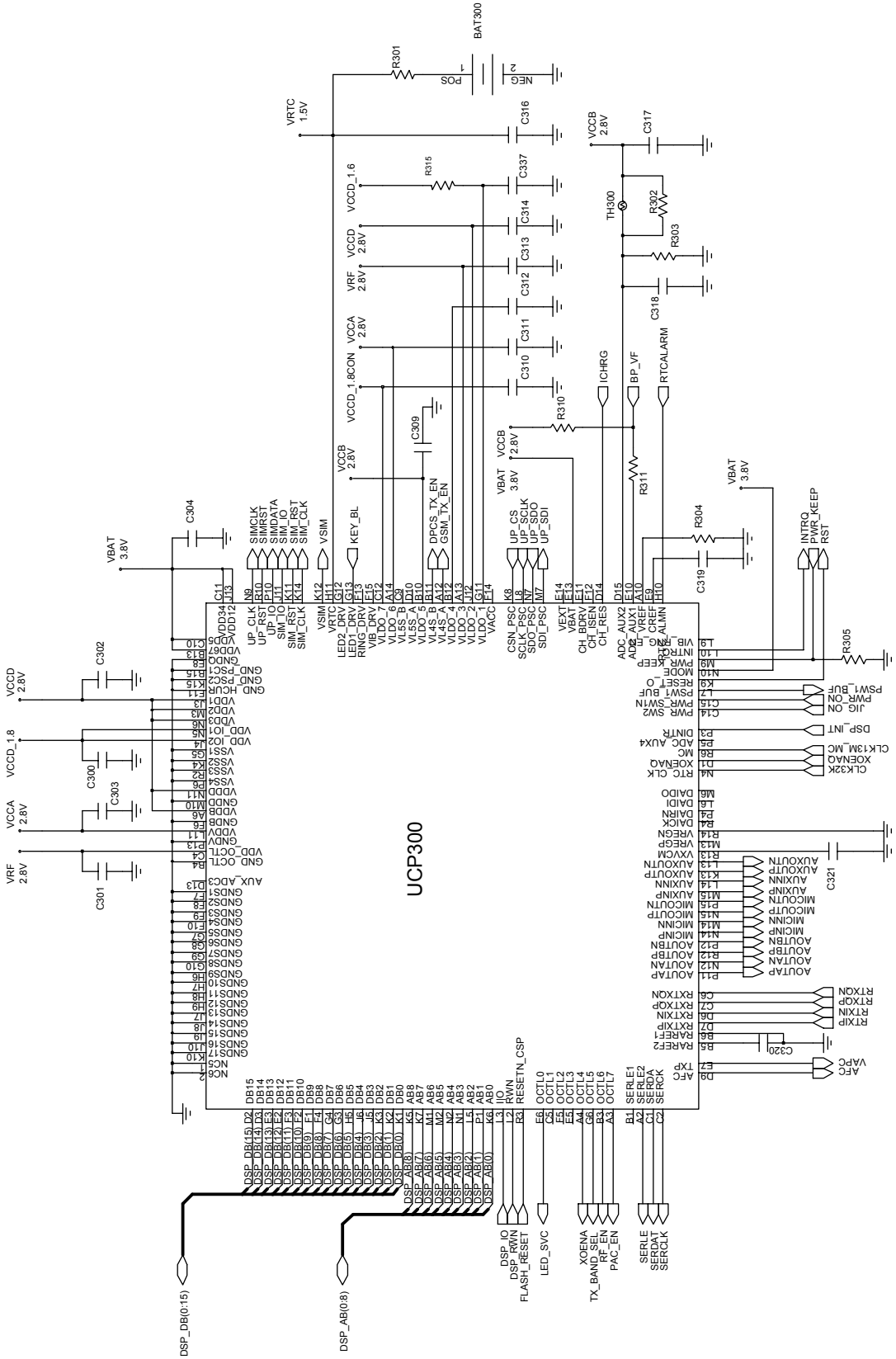

SAMSUNG Proprietary-Contents may change without notice
This Document can not be used without Samsung's authorization

2-1-2. Initial

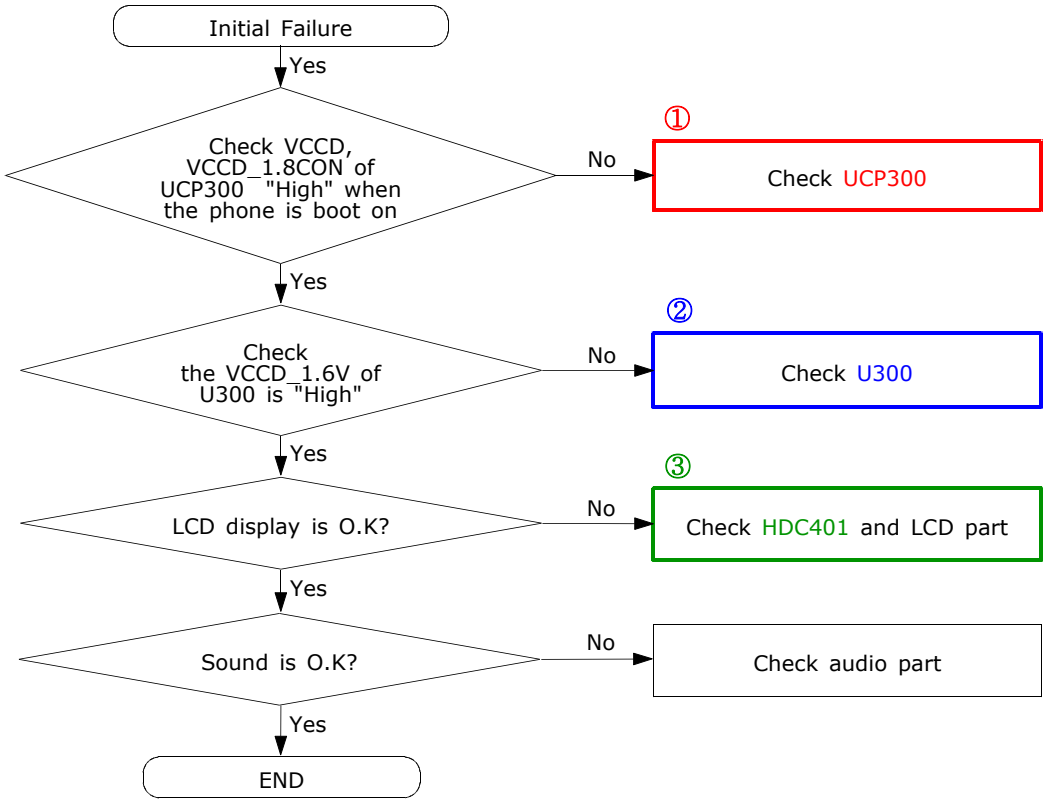

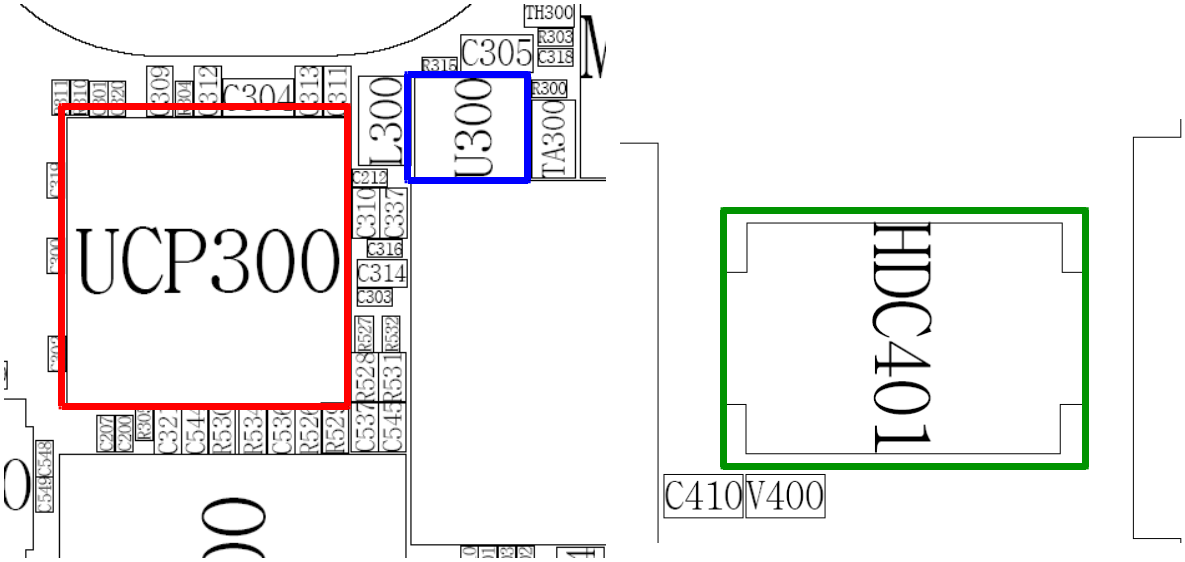

SAMSUNG Proprietary-Contents may change without notice
This Document can not be used without Samsung's authorization

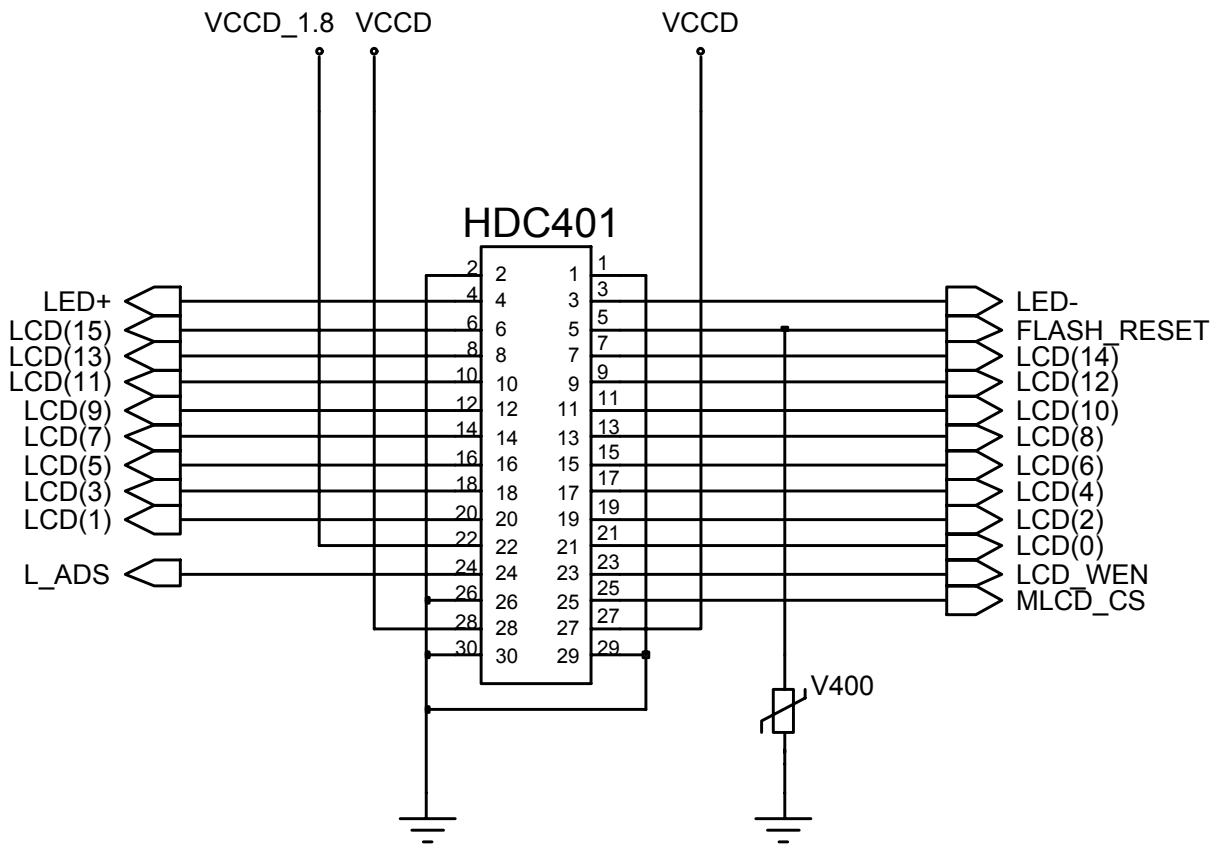

SAMSUNG Proprietary-Contents may change without notice
This Document can not be used without Samsung's authorization

2-1-3. Sim Part

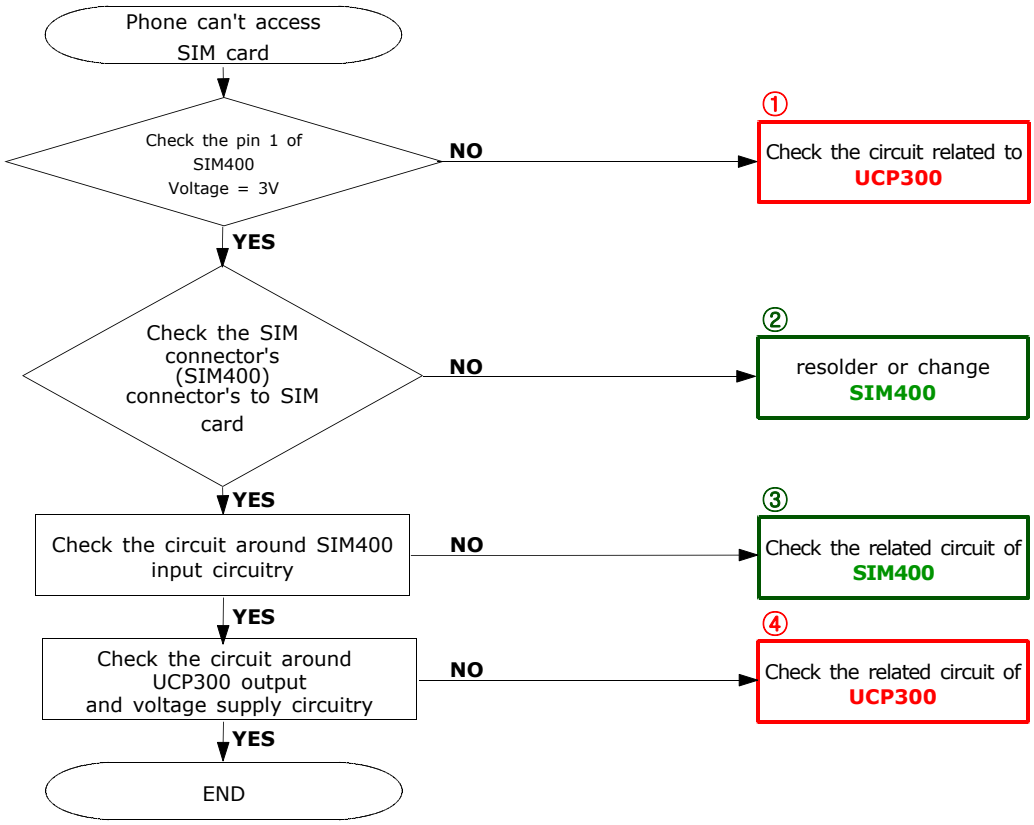

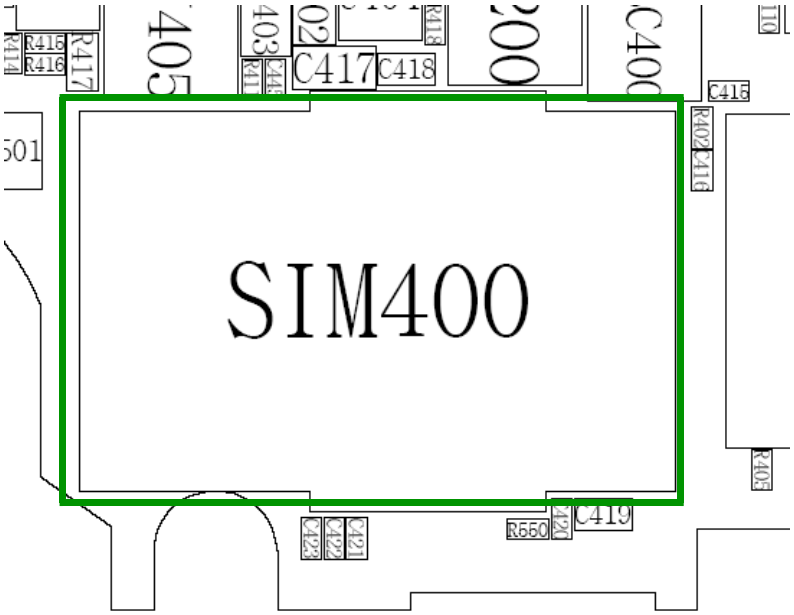

SAMSUNG Proprietary-Contents may change without notice
This Document can not be used without Samsung's authorization

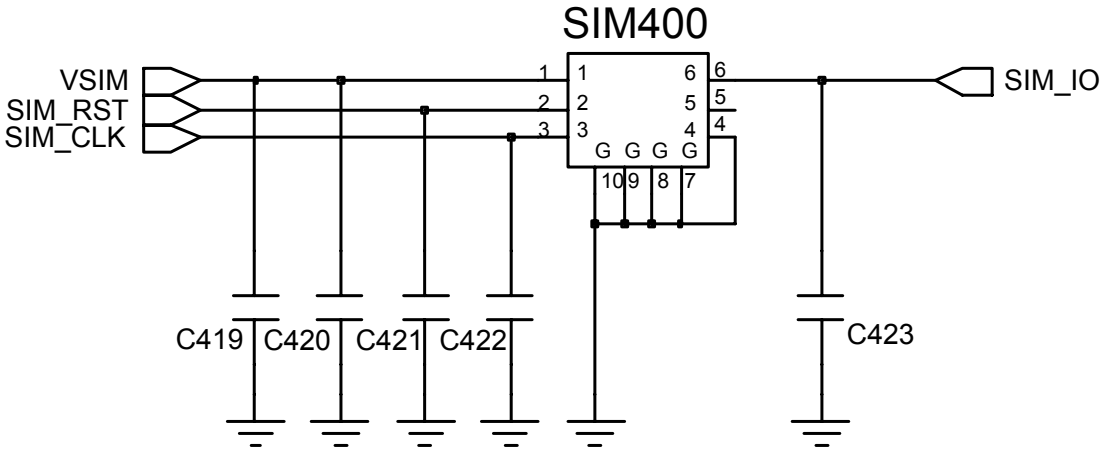

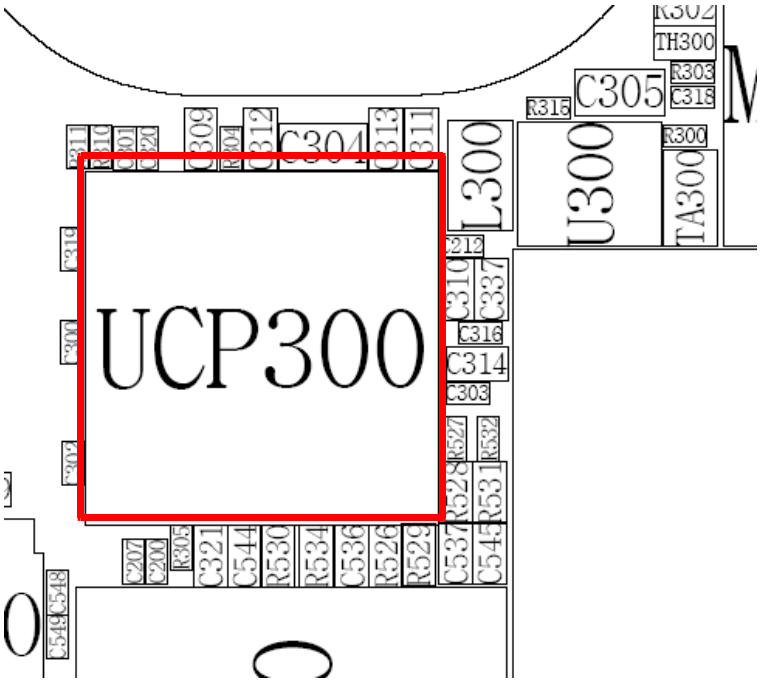

SAMSUNG Proprietary-Contents may change without notice
This Document can not be used without Samsung's authorization

2-1-4. Charging Part

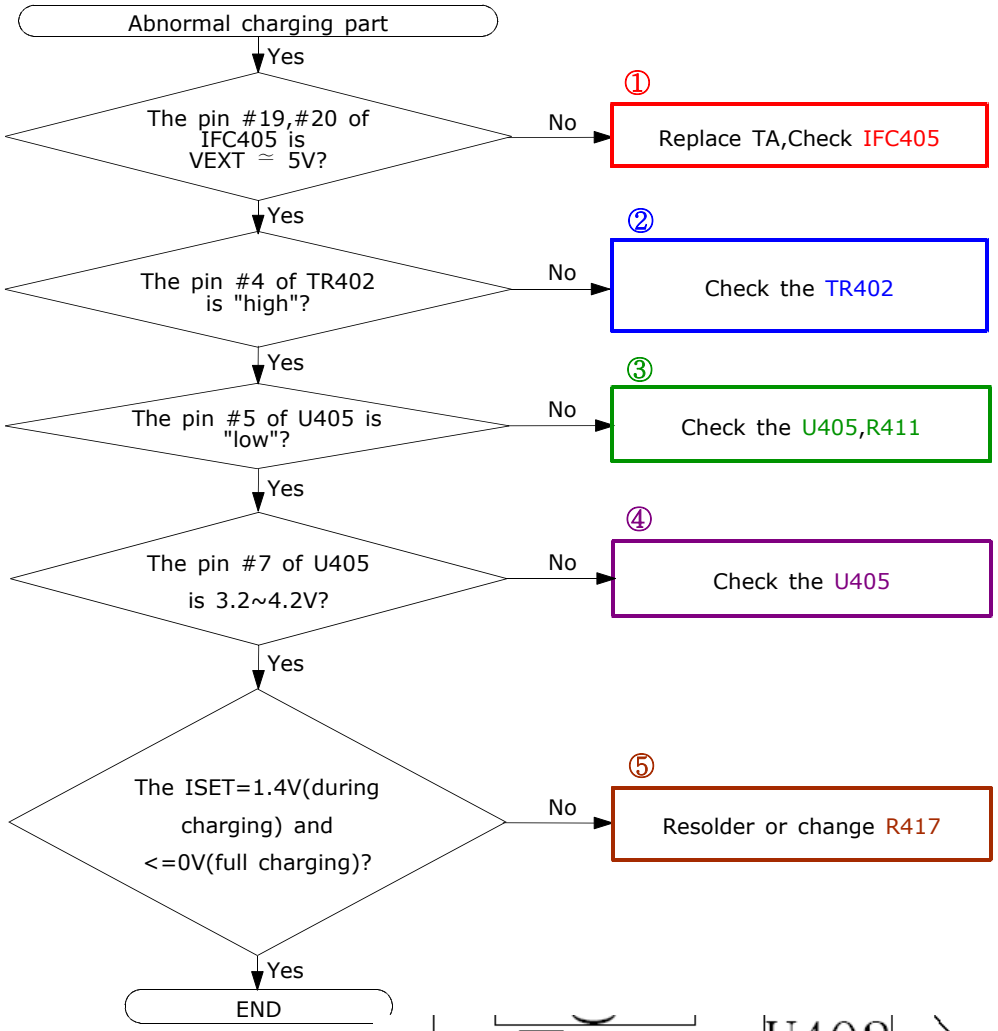

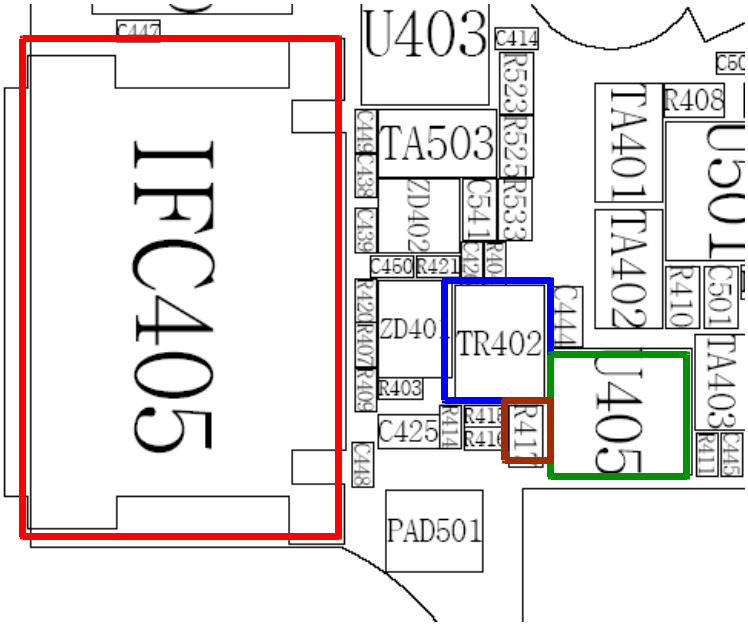

SAMSUNG Proprietary-Contents may change without notice
This Document can not be used without Samsung's authorization

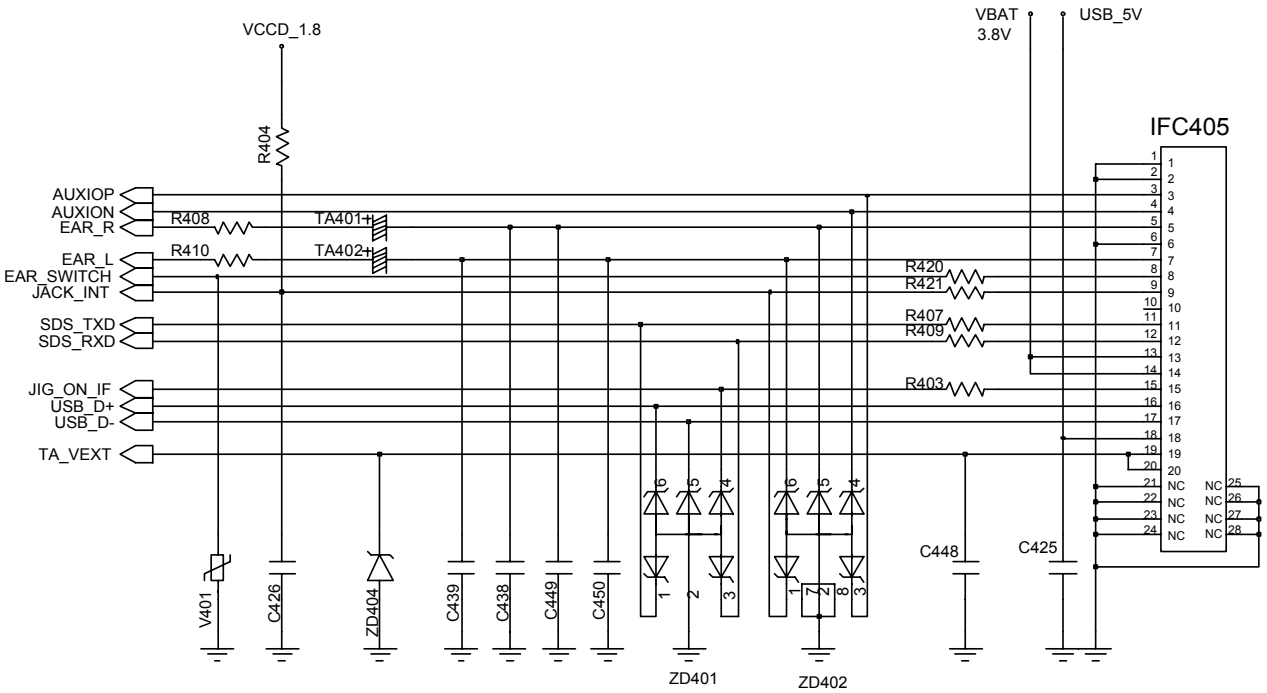

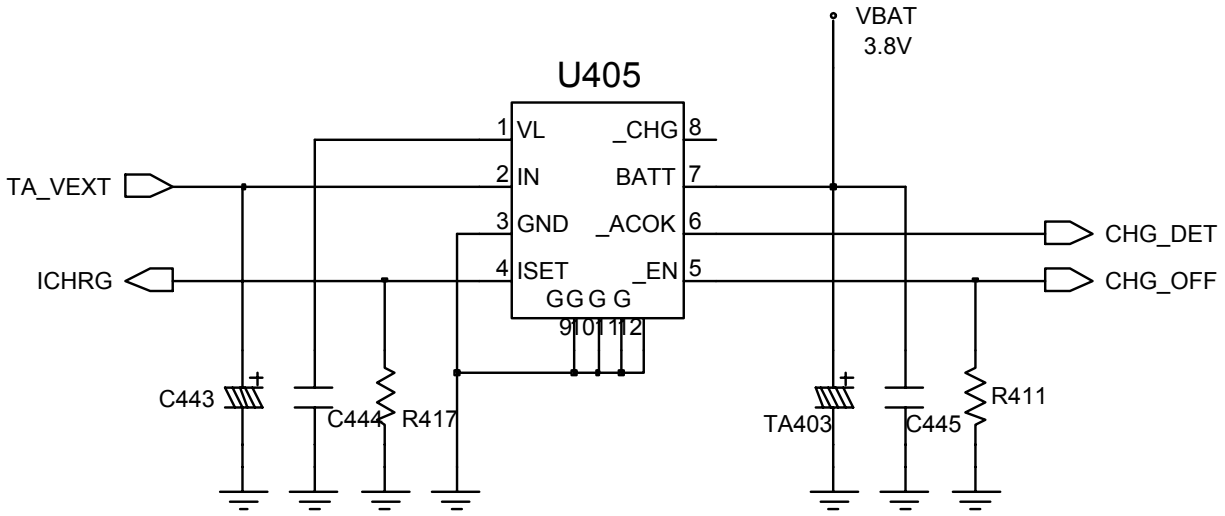

SAMSUNG Proprietary-Contents may change without notice
This Document can not be used without Samsung's authorization

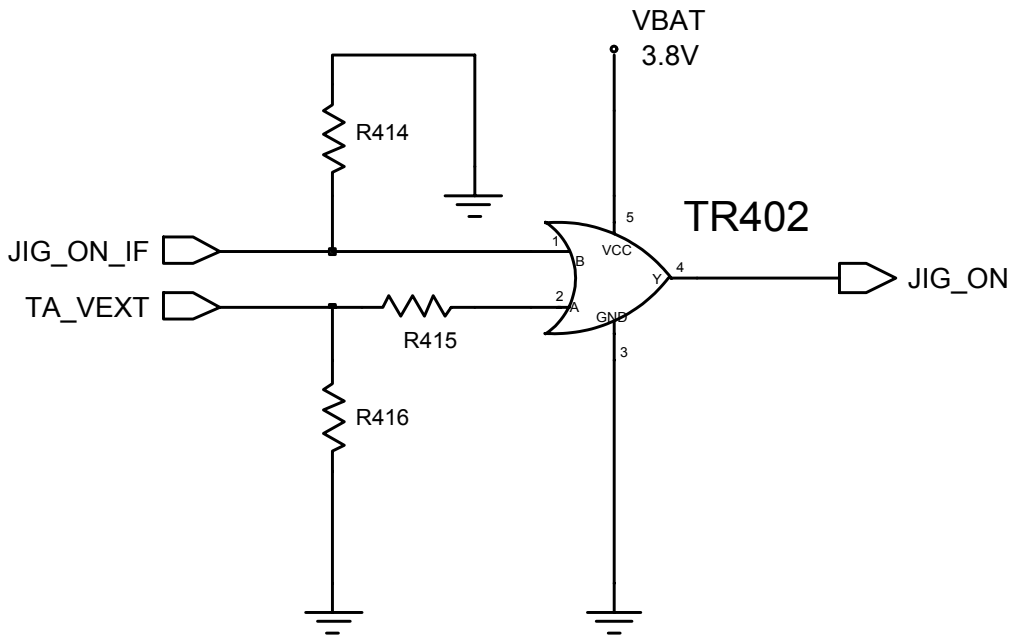

SAMSUNG Proprietary-Contents may change without notice
This Document can not be used without Samsung's authorization

2-1-5. Microphone Part

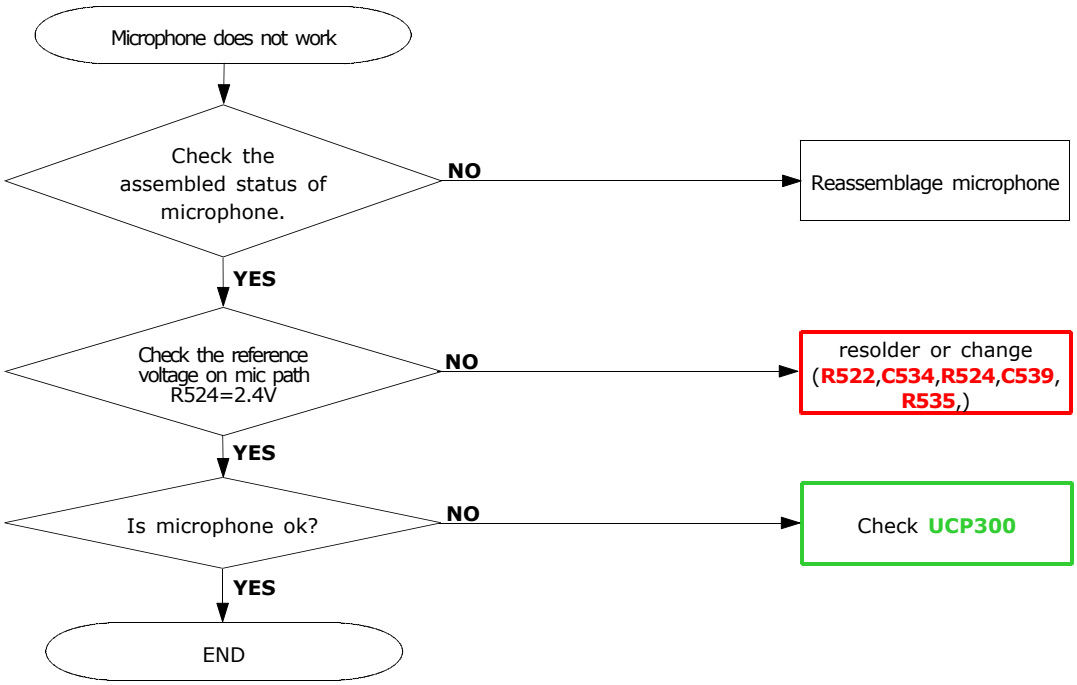

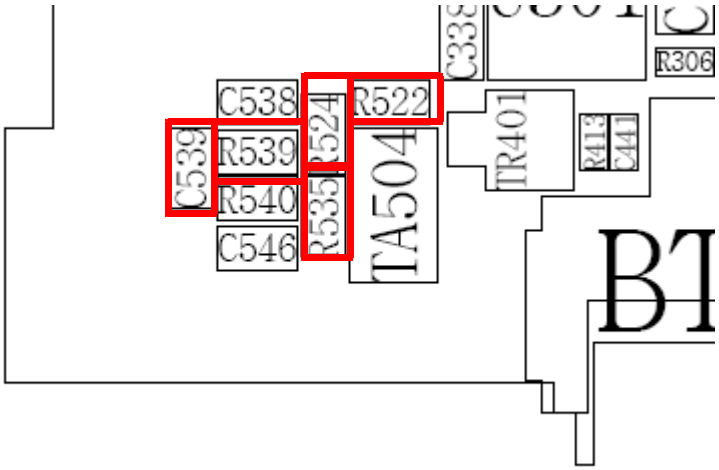

SAMSUNG Proprietary-Contents may change without notice
This Document can not be used without Samsung's authorization

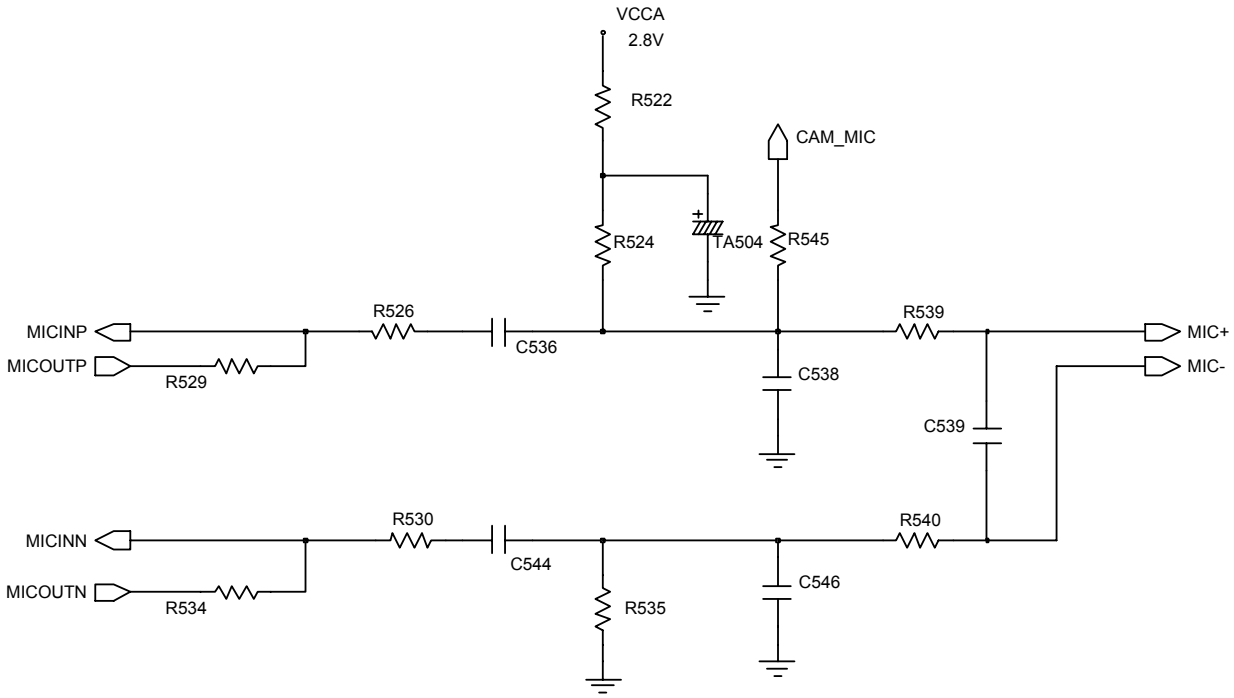

2-1-6.

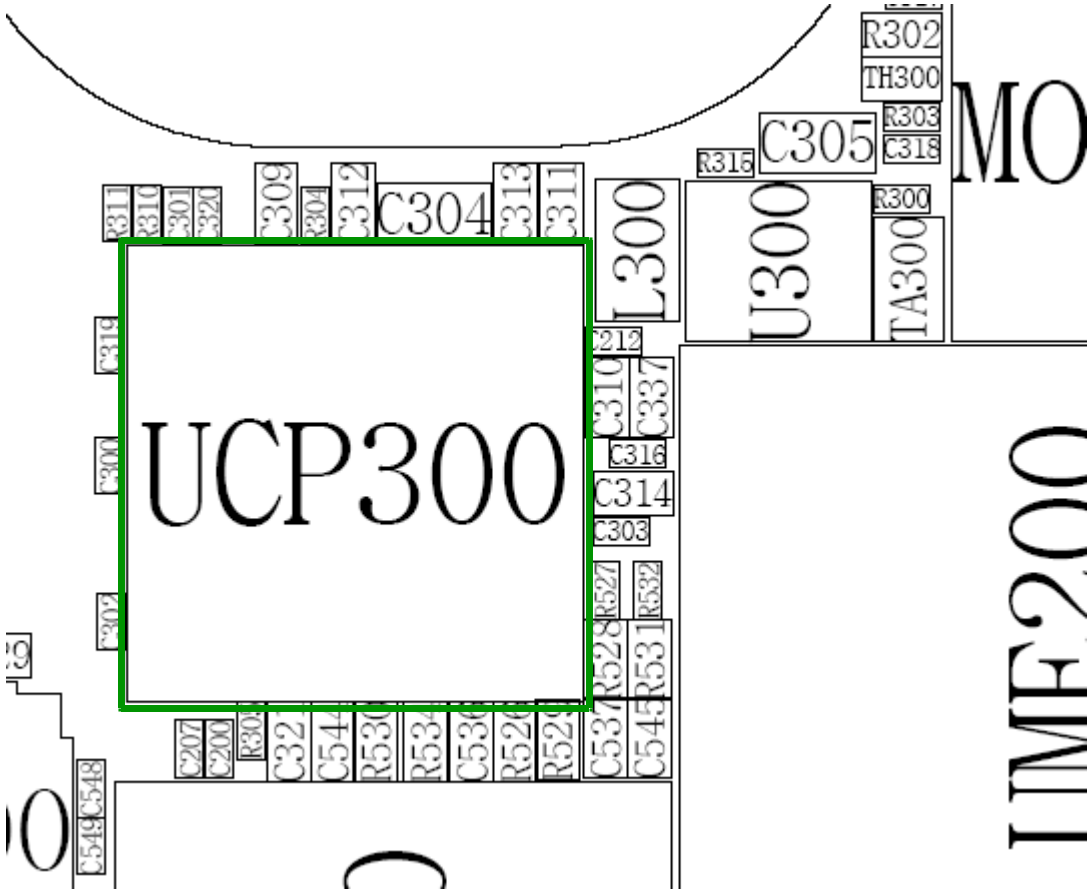

SAMSUNG Proprietary-Contents may change without notice
This Document can not be used without Samsung's authorization

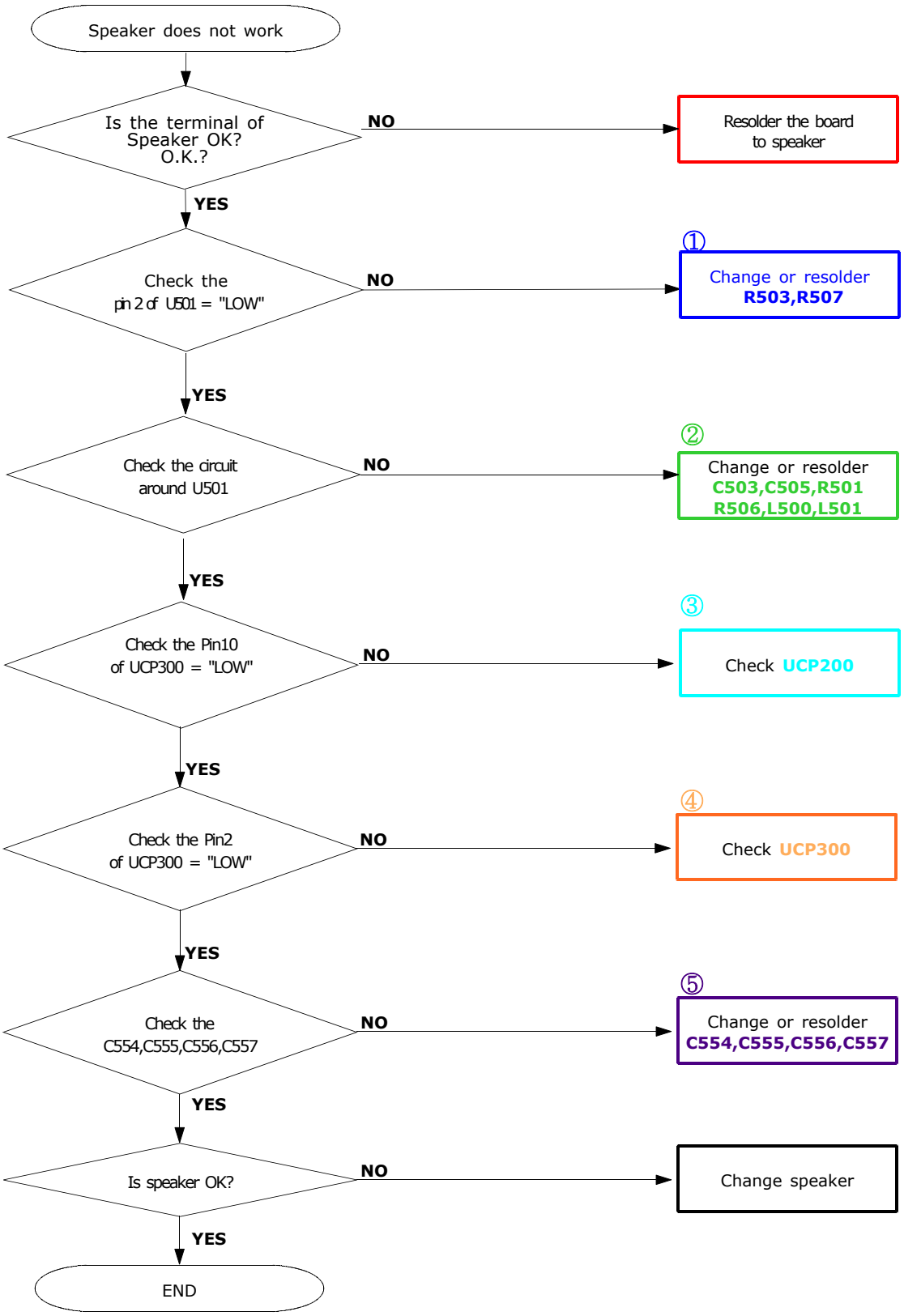

SAMSUNG Proprietary-Contents may change without notice
This Document can not be used without Samsung's authorization

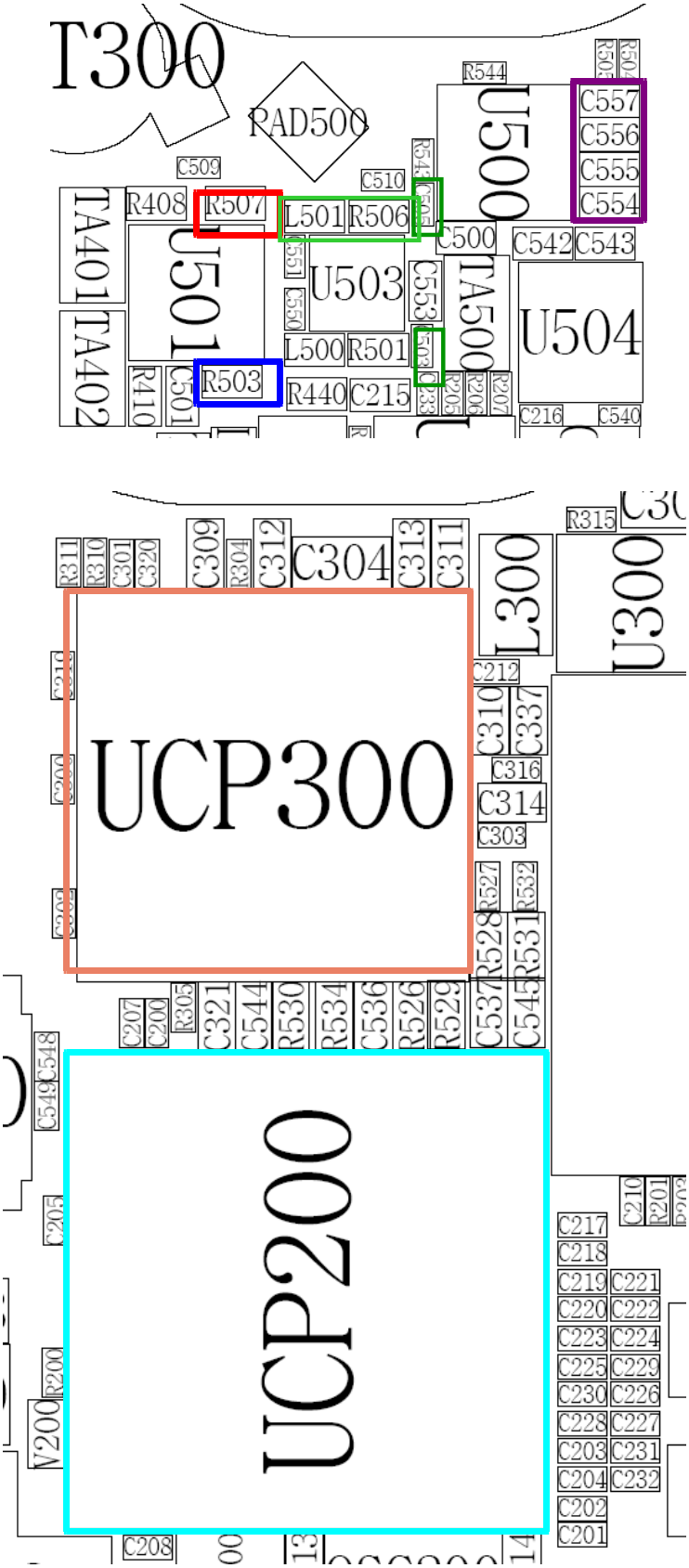

SAMSUNG Proprietary-Contents may change without notice
This Document can not be used without Samsung's authorization

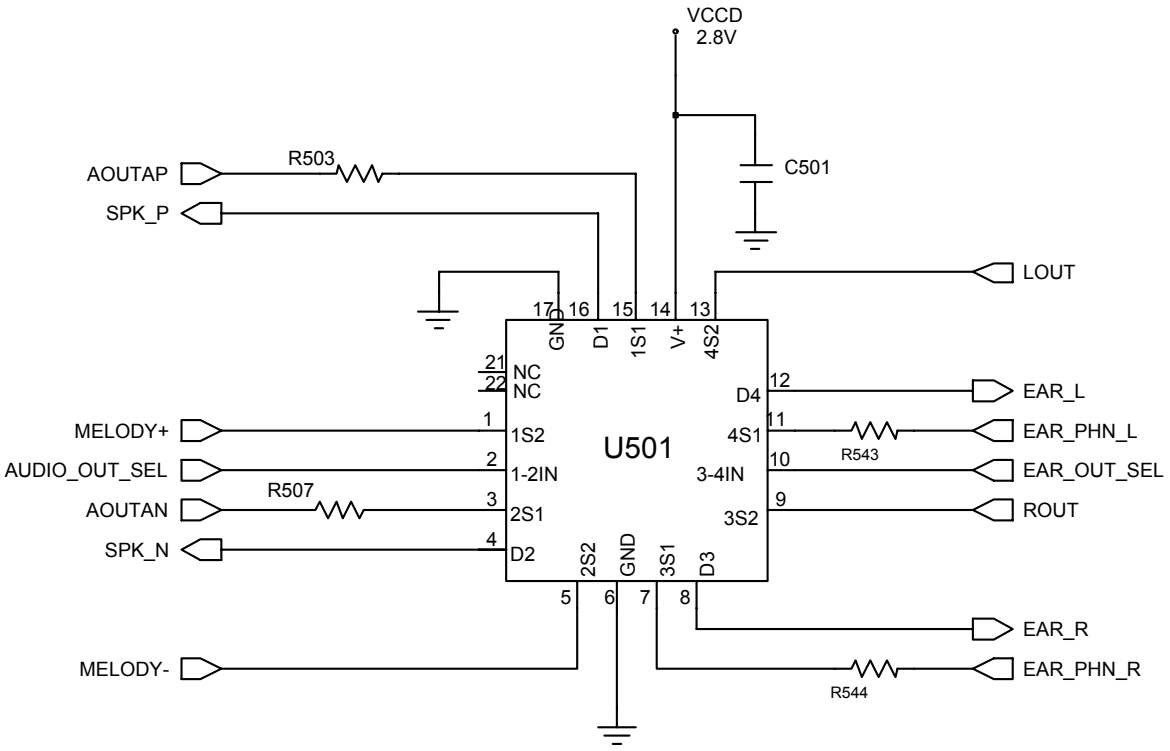

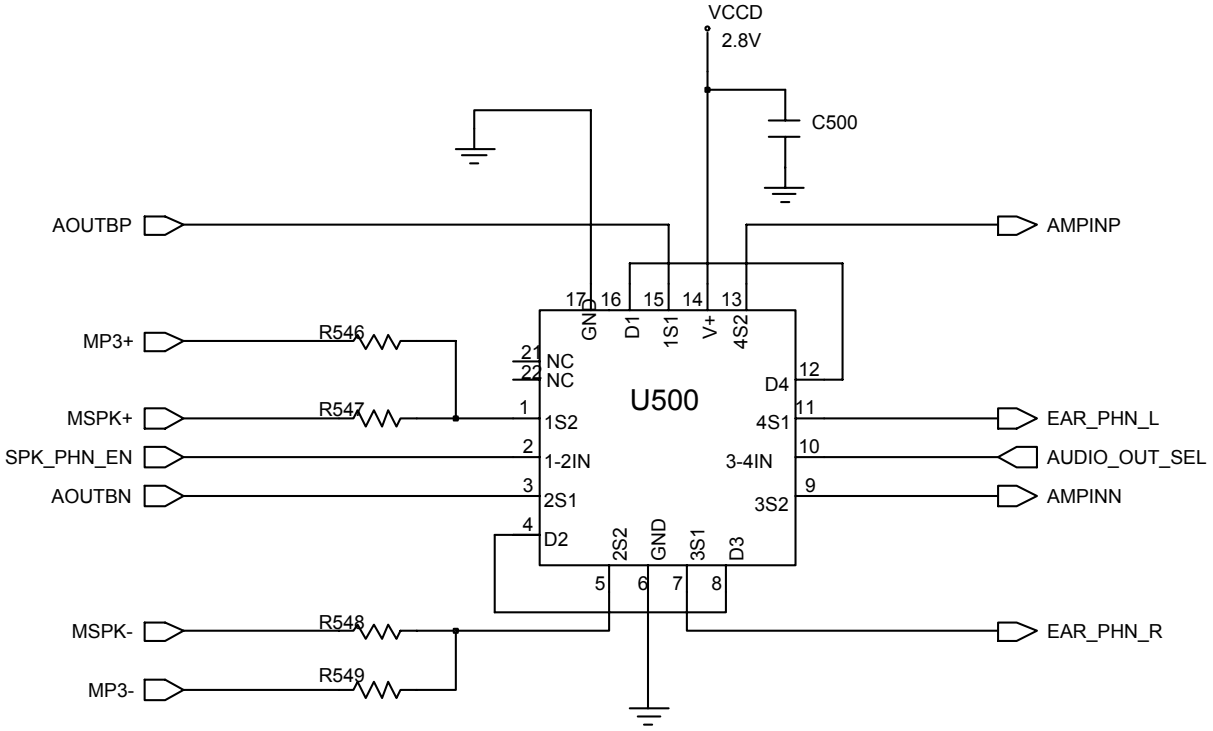

SAMSUNG Proprietary-Contents may change without notice
This Document can not be used without Samsung's authorization

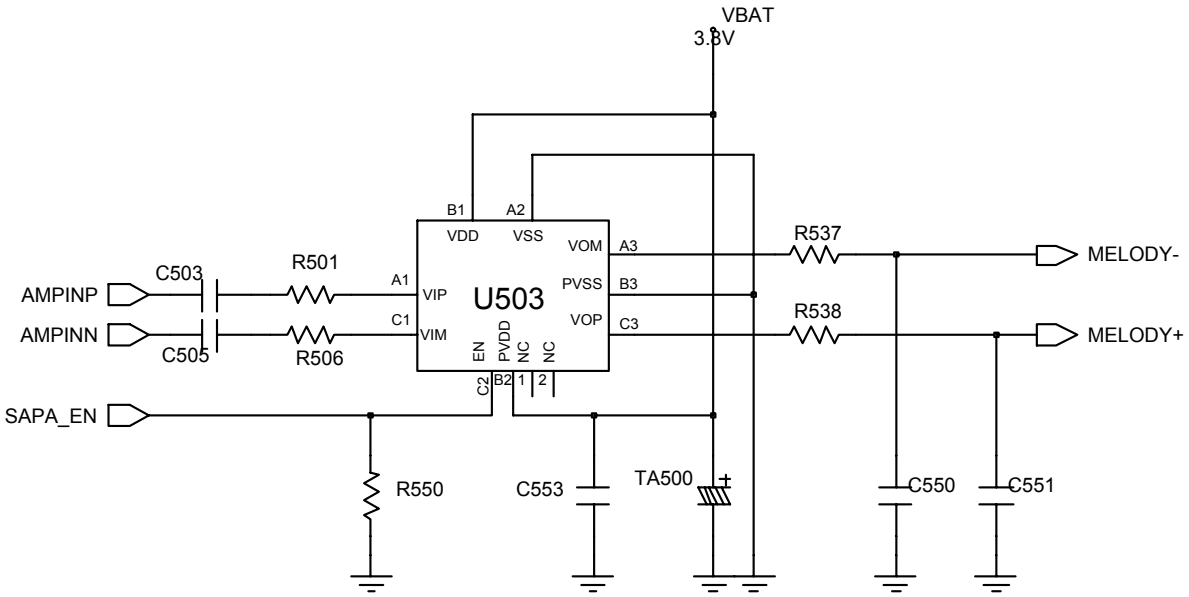

SAMSUNG Proprietary-Contents may change without notice
This Document can not be used without Samsung's authorization

2-1-7. LCD

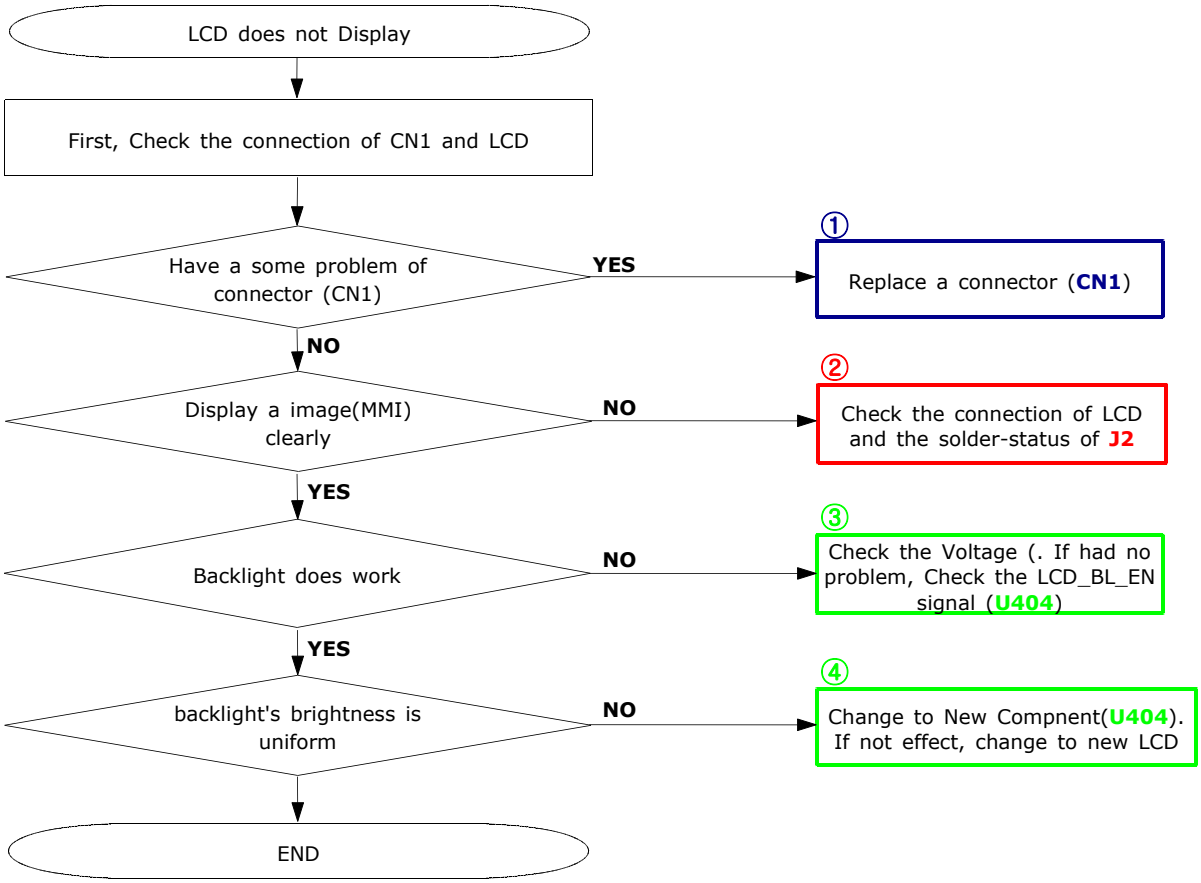

SAMSUNG Proprietary-Contents may change without notice
This Document can not be used without Samsung's authorization

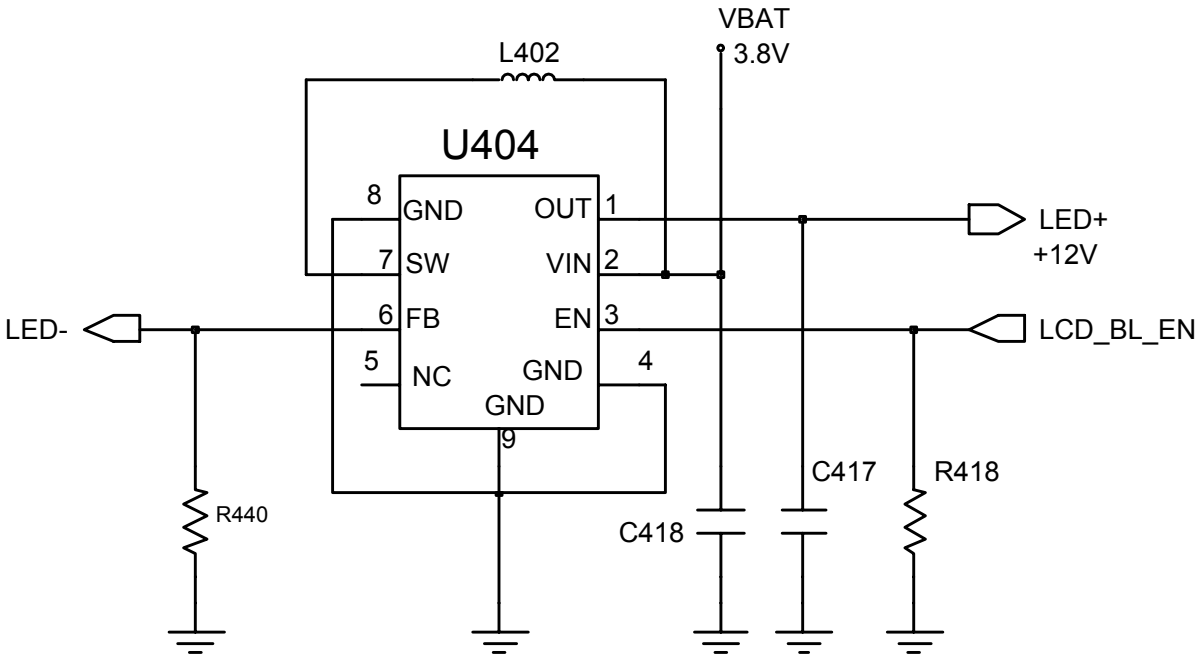

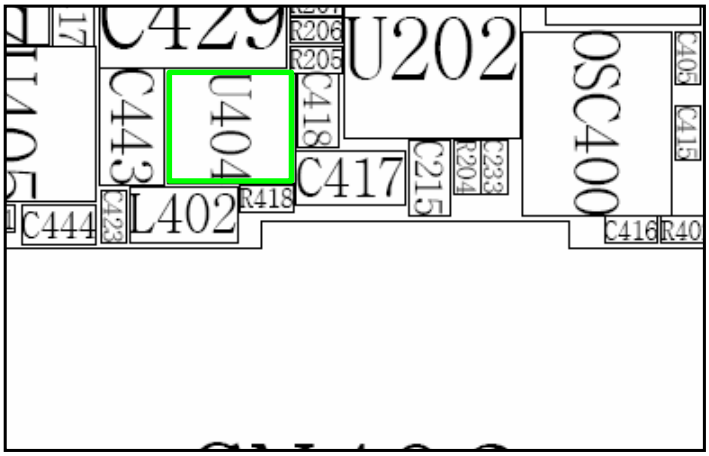

SAMSUNG Proprietary-Contents may change without notice
This Document can not be used without Samsung's authorization

. PLACEMENT [FRONT]

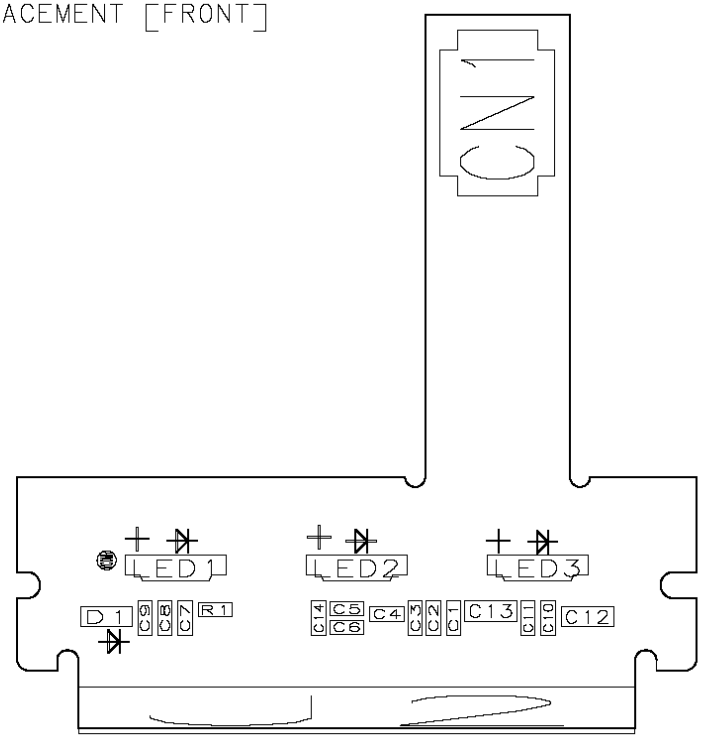

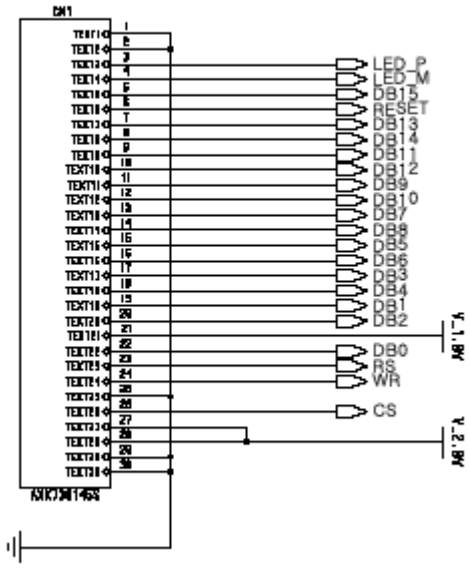

SAMSUNG Proprietary-Contents may change without notice
This Document can not be used without Samsung's authorization

SAMSUNG Proprietary-Contents may change without notice
This Document can not be used without Samsung's authorization

2-1-8. Camera

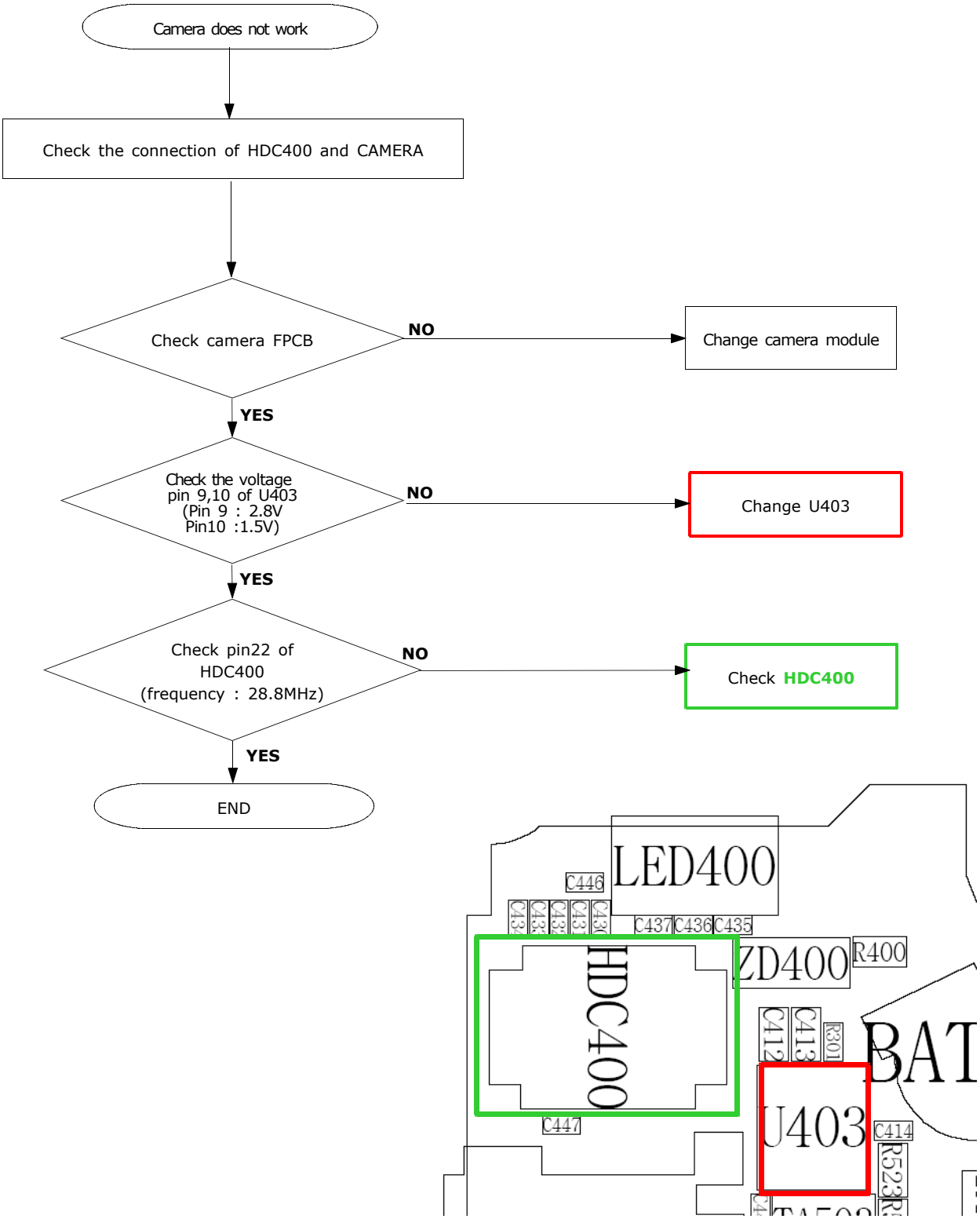

SAMSUNG Proprietary-Contents may change without notice
This Document can not be used without Samsung's authorization

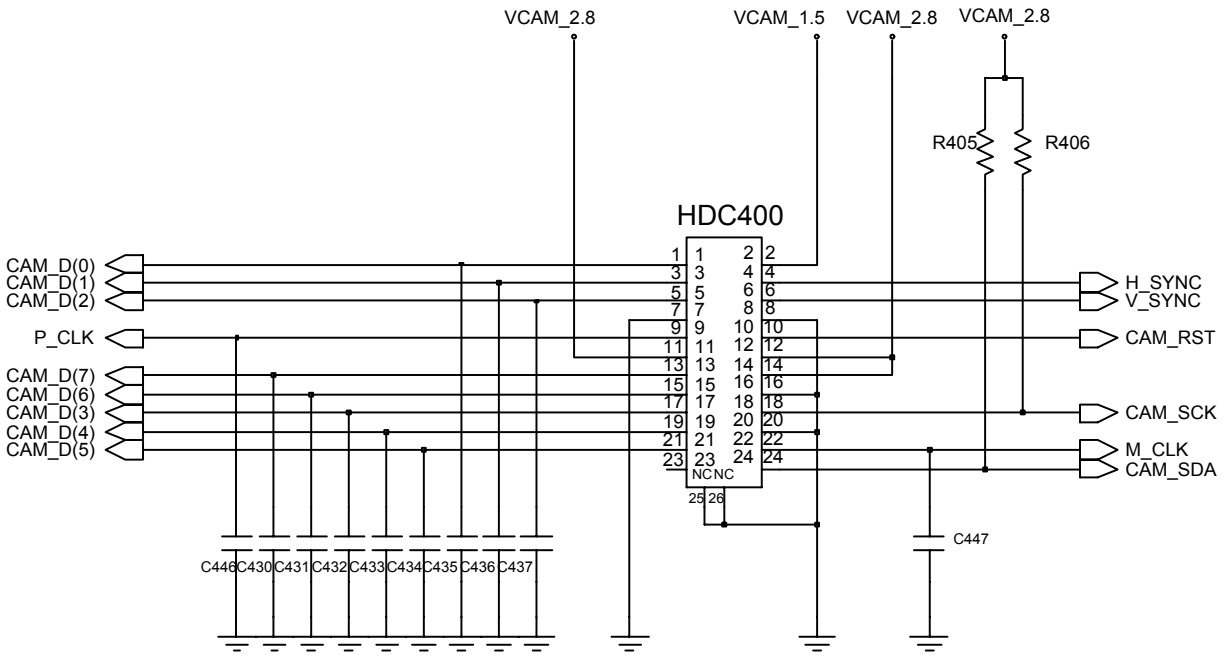

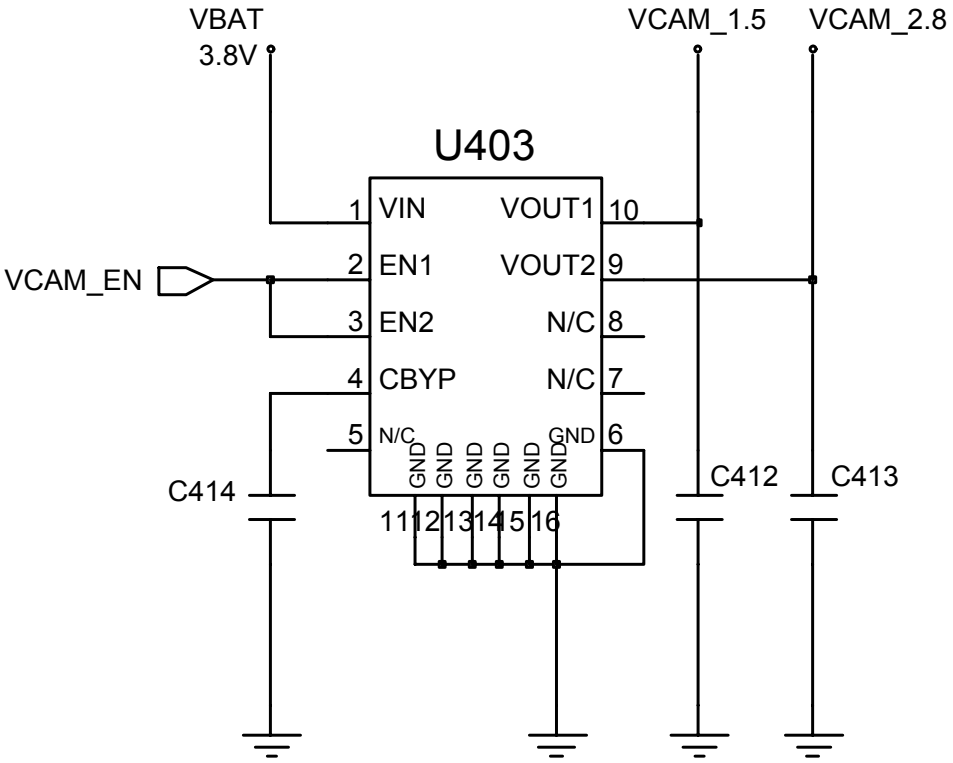

SAMSUNG Proprietary-Contents may change without notice
This Document can not be used without Samsung's authorization

2-2.RF

2-2-1. GSM Receiver

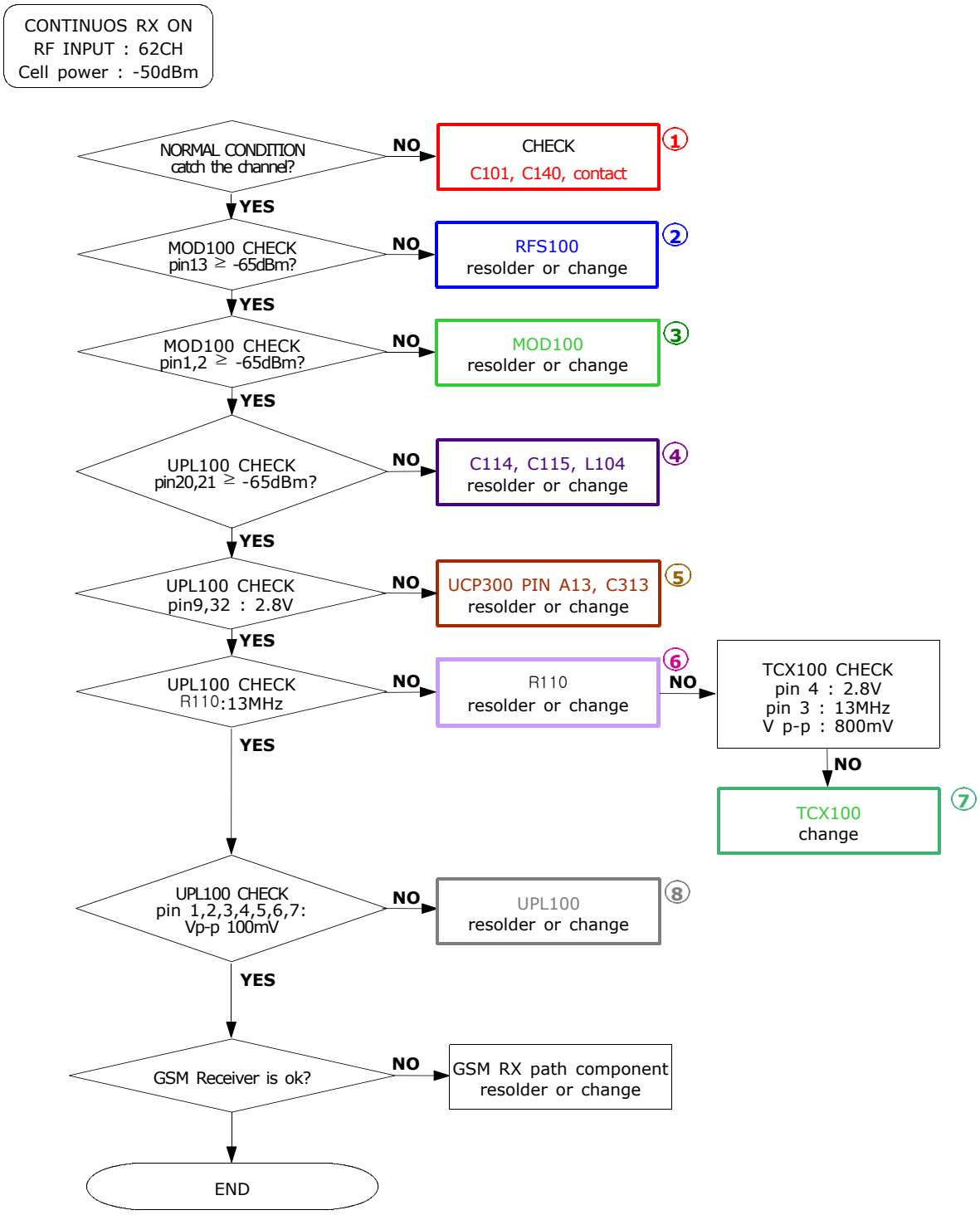

SAMSUNG Proprietary-Contents may change without notice
This Document can not be used without Samsung's authorization

2-2-2. DCS Receiver

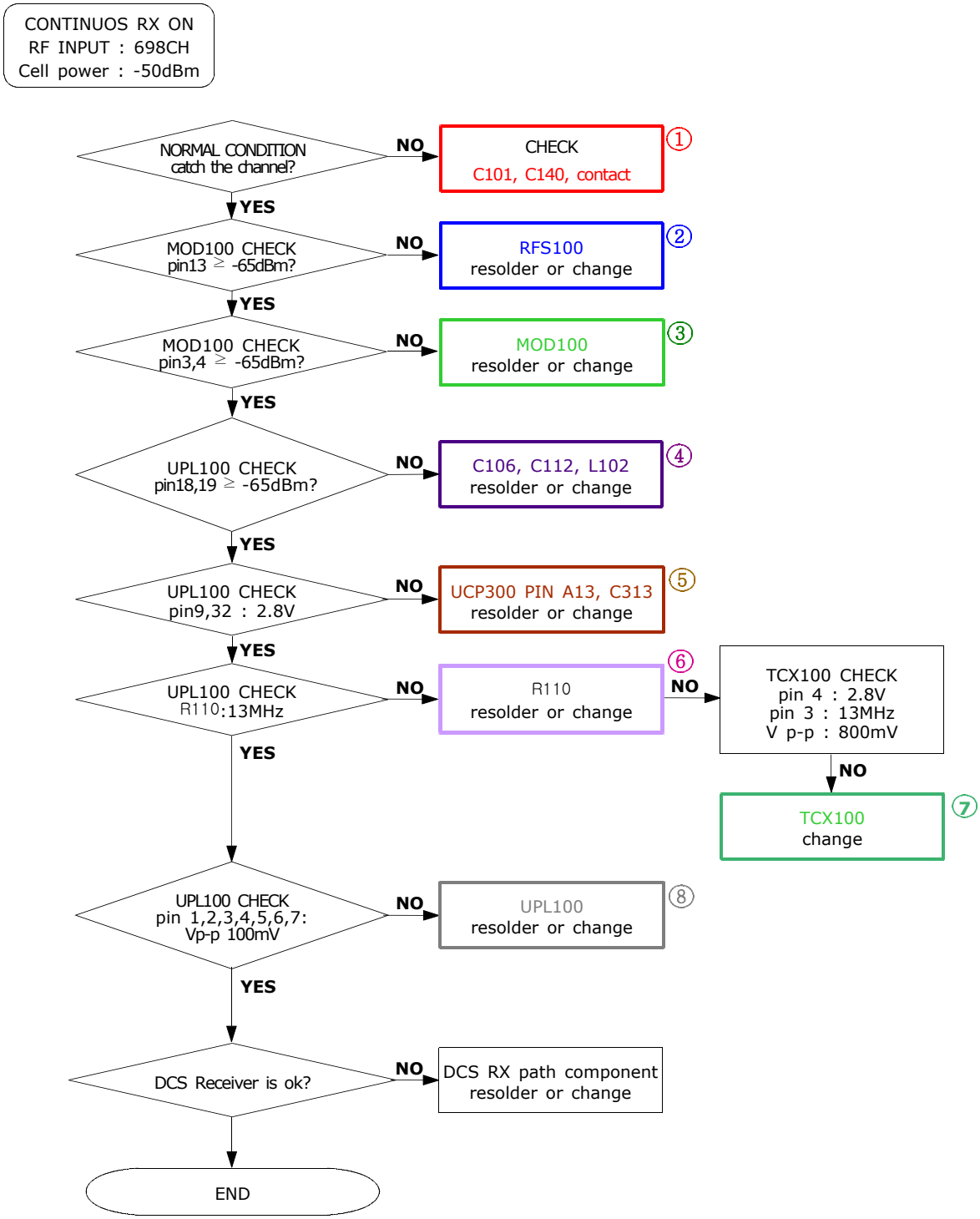

SAMSUNG Proprietary-Contents may change without notice
This Document can not be used without Samsung's authorization

2-2-3. PCS Receiver

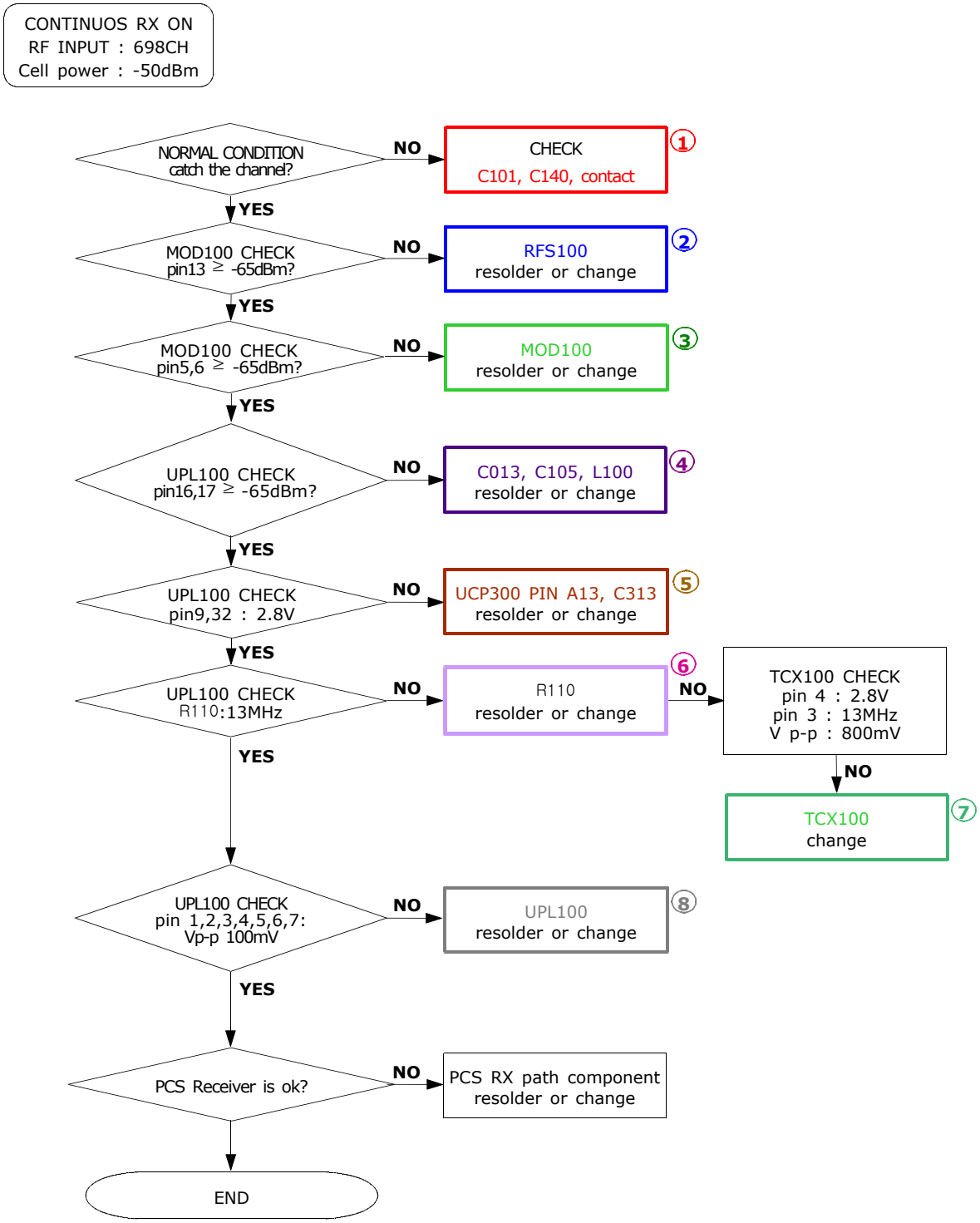

SAMSUNG Proprietary-Contents may change without notice
This Document can not be used without Samsung's authorization

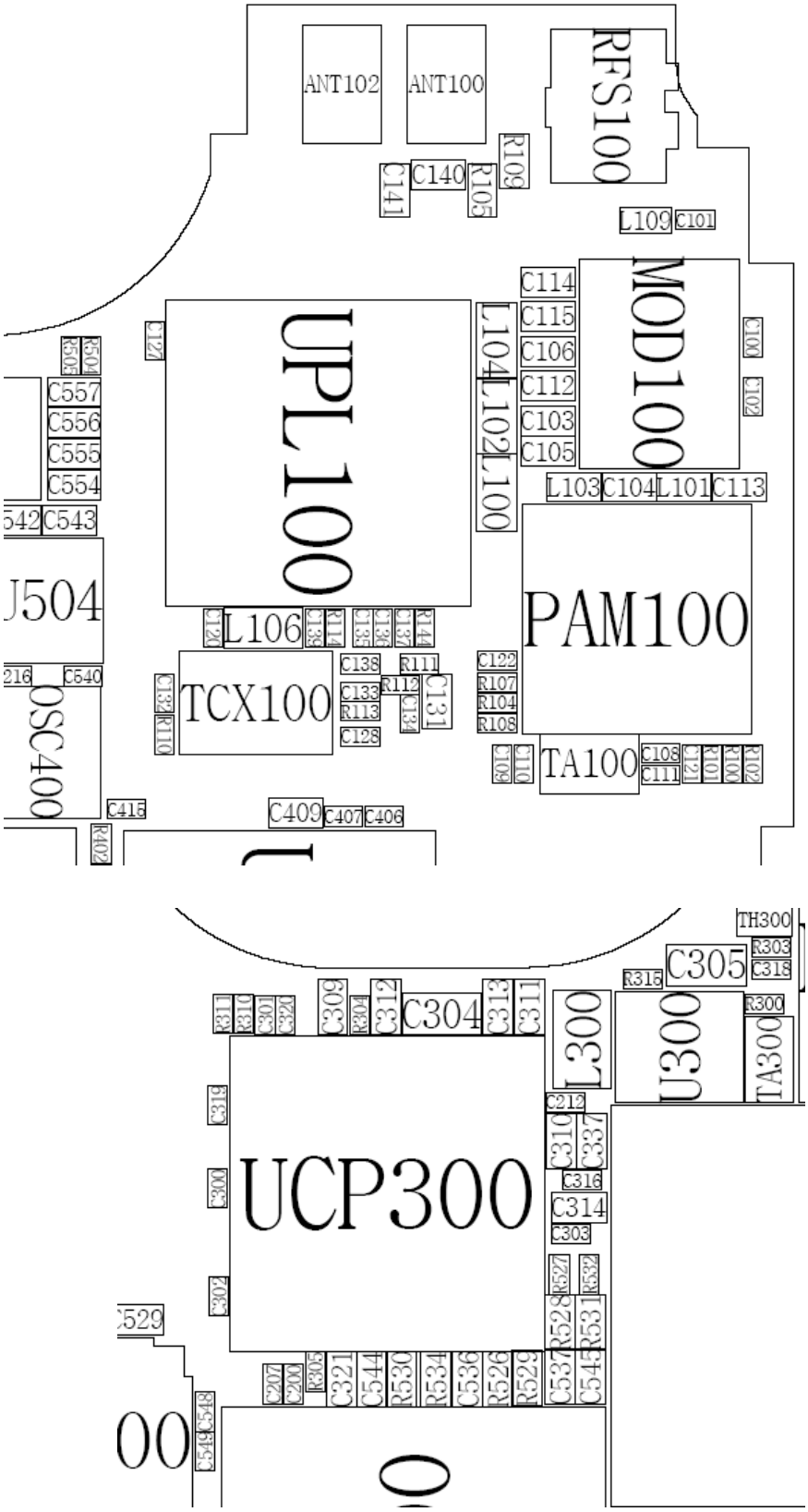

SAMSUNG Proprietary-Contents may change without notice
This Document can not be used without Samsung's authorization

2-2-4. GSM Transmitter

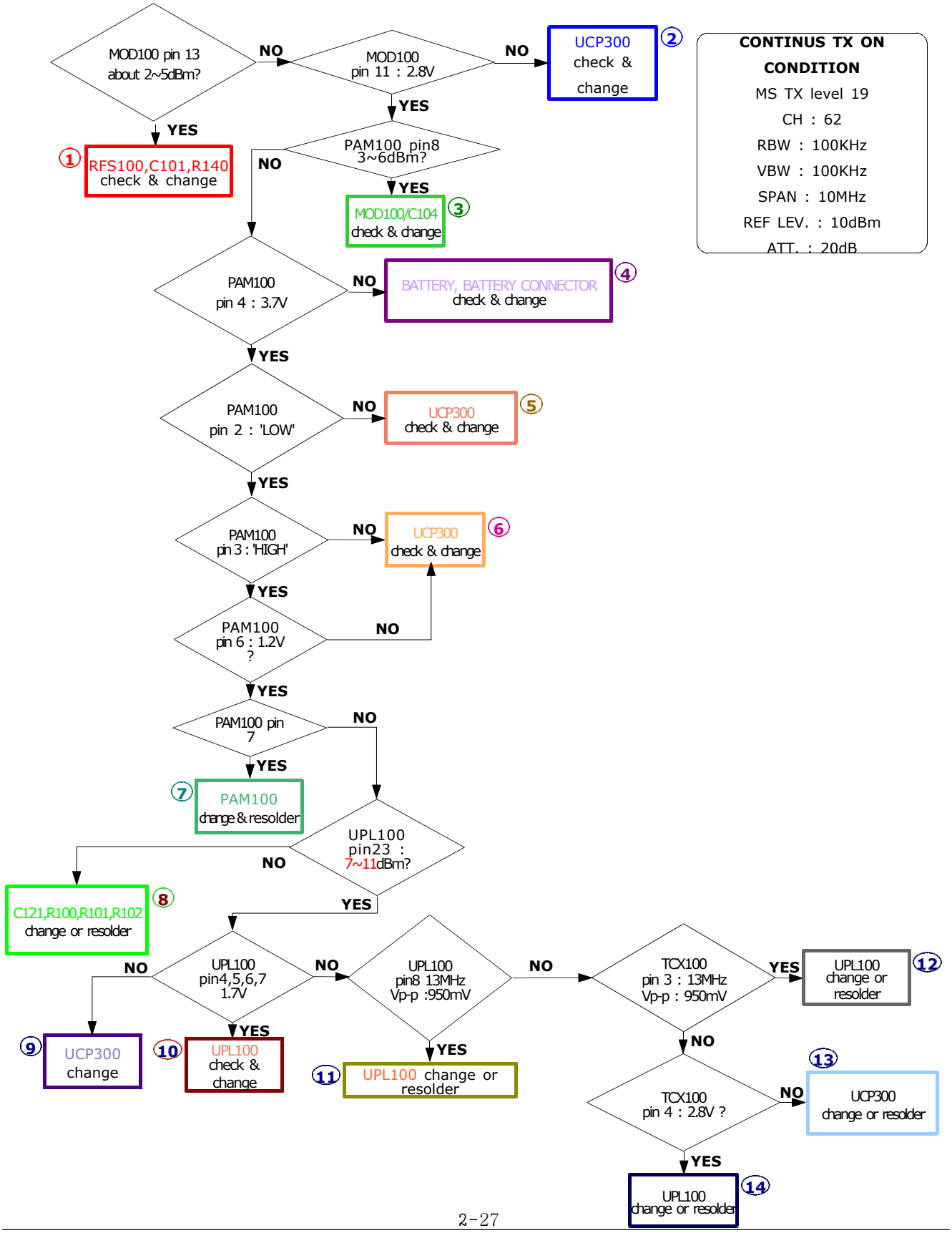

SAMSUNG Proprietary-Contents may change without notice
This Document can not be used without Samsung's authorization

2-2-5. DCS Transmitter

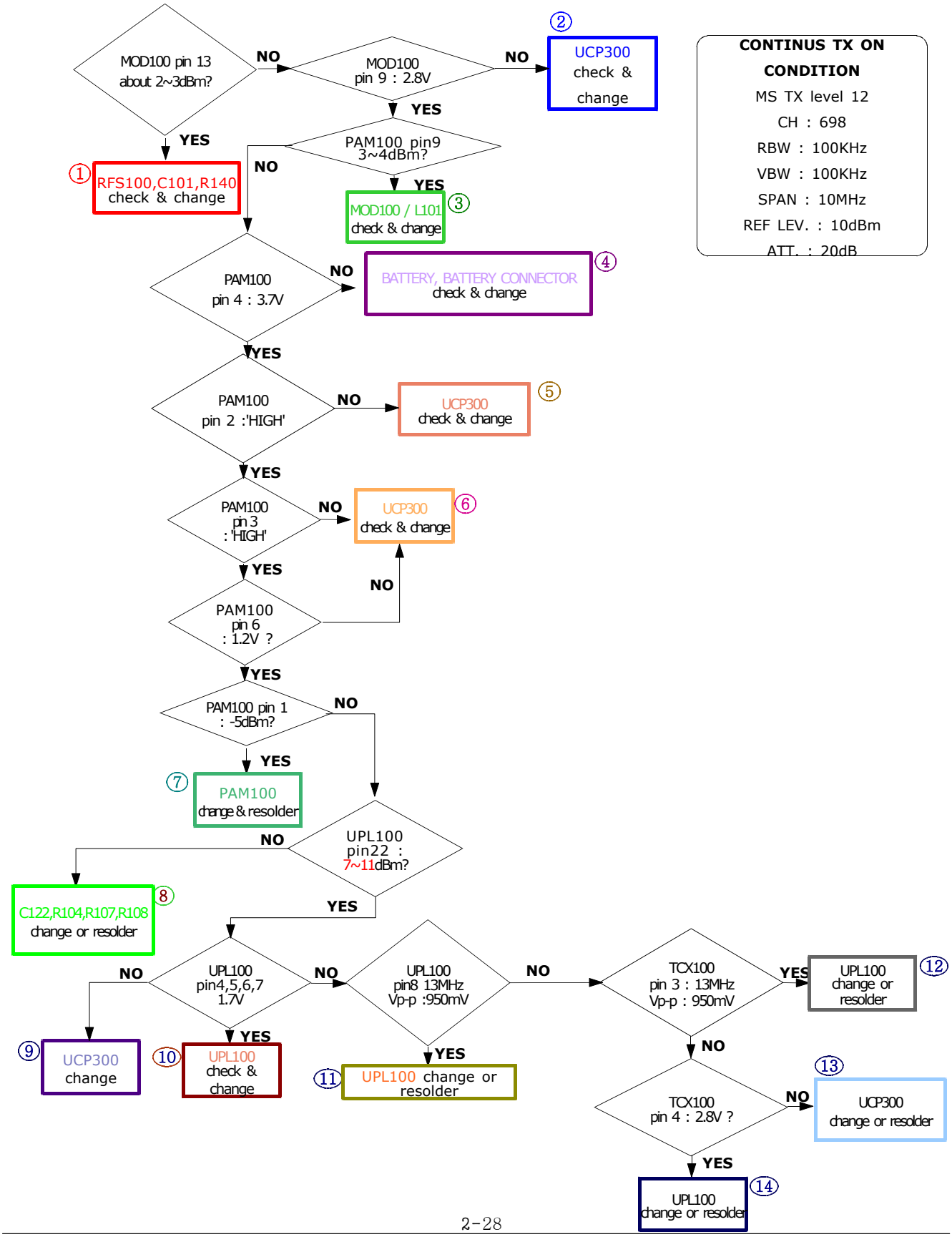

SAMSUNG Proprietary-Contents may change without notice
This Document can not be used without Samsung's authorization

2-2-6. PCS Transmitter

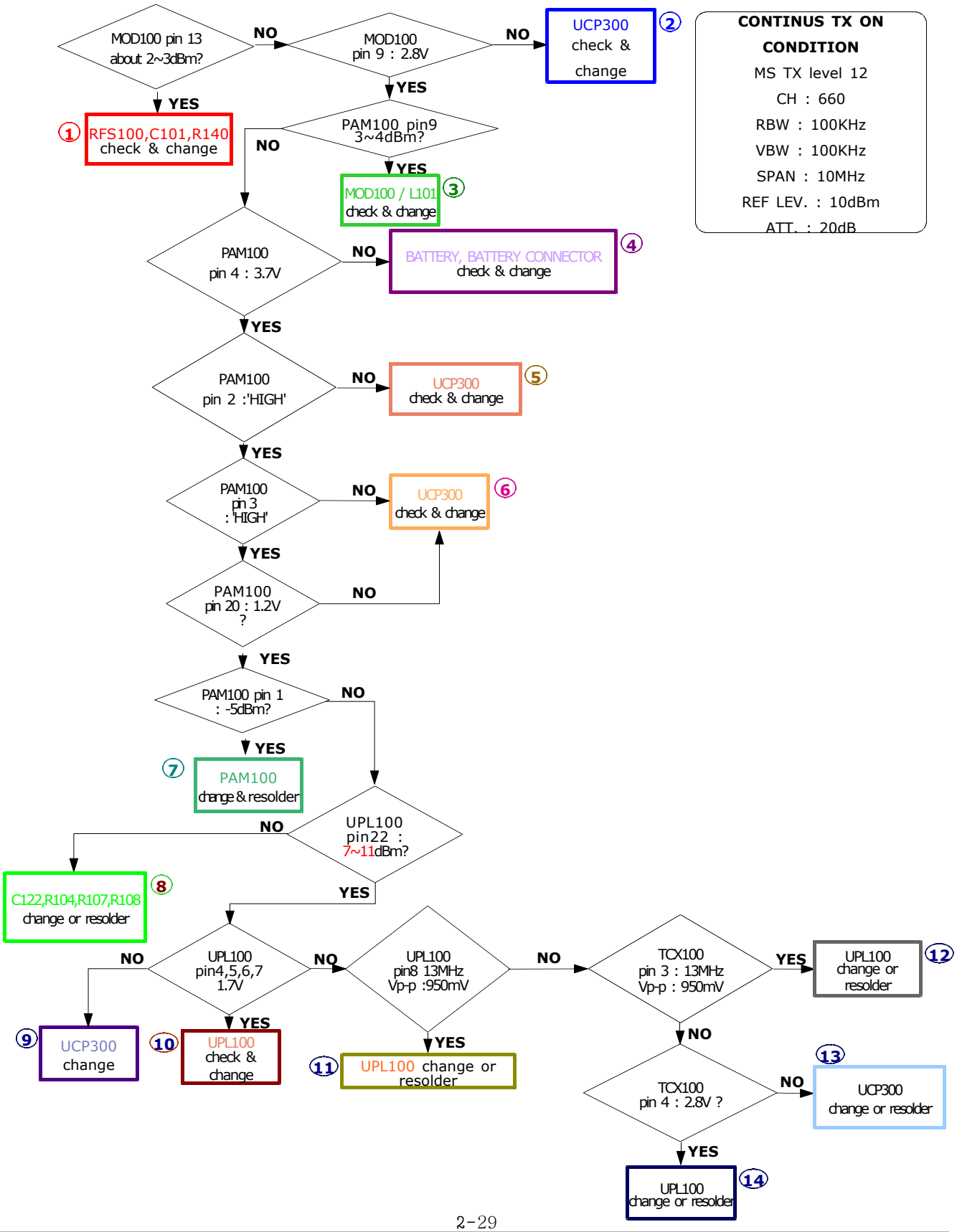

SAMSUNG Proprietary-Contents may change without notice
This Document can not be used without Samsung's authorization

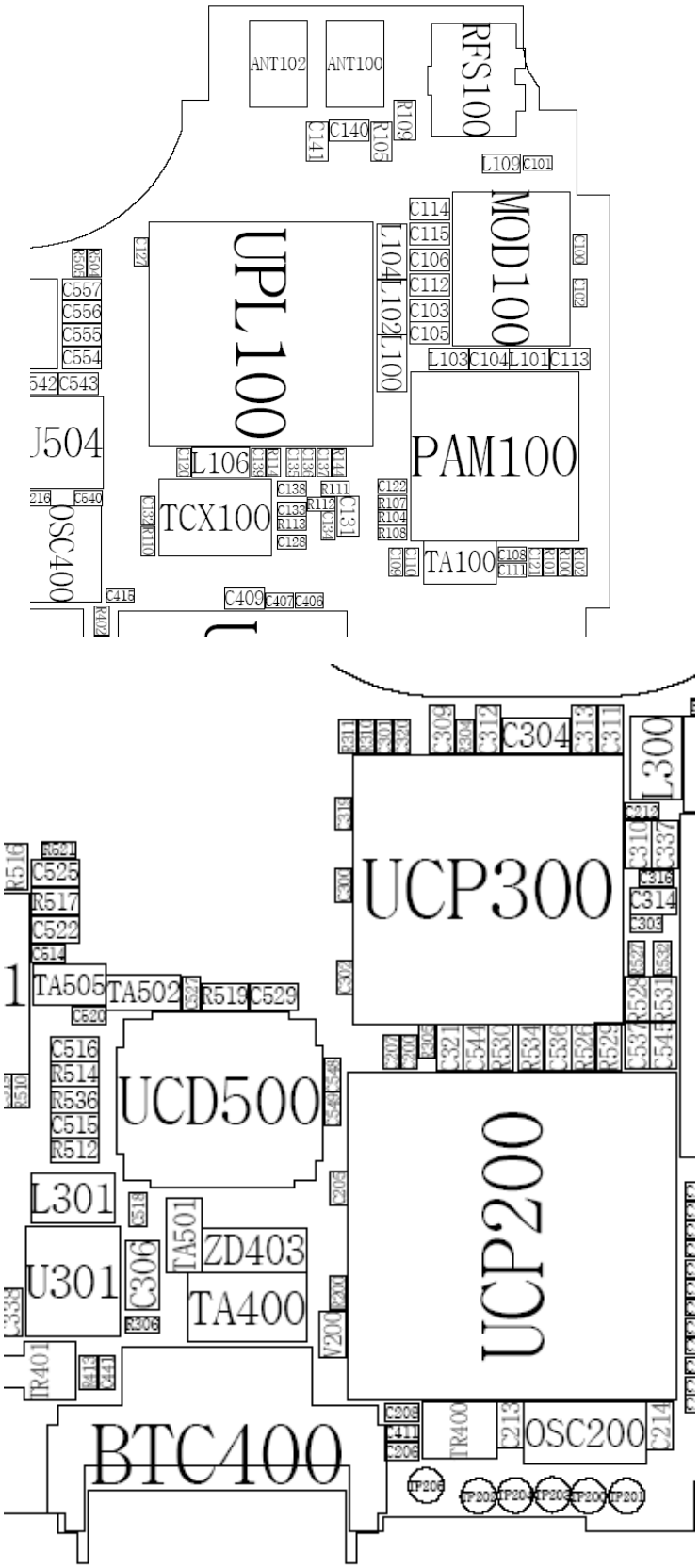

SAMSUNG Proprietary-Contents may change without notice
This Document can not be used without Samsung's authorization

2-3-1. Bluetooth Part

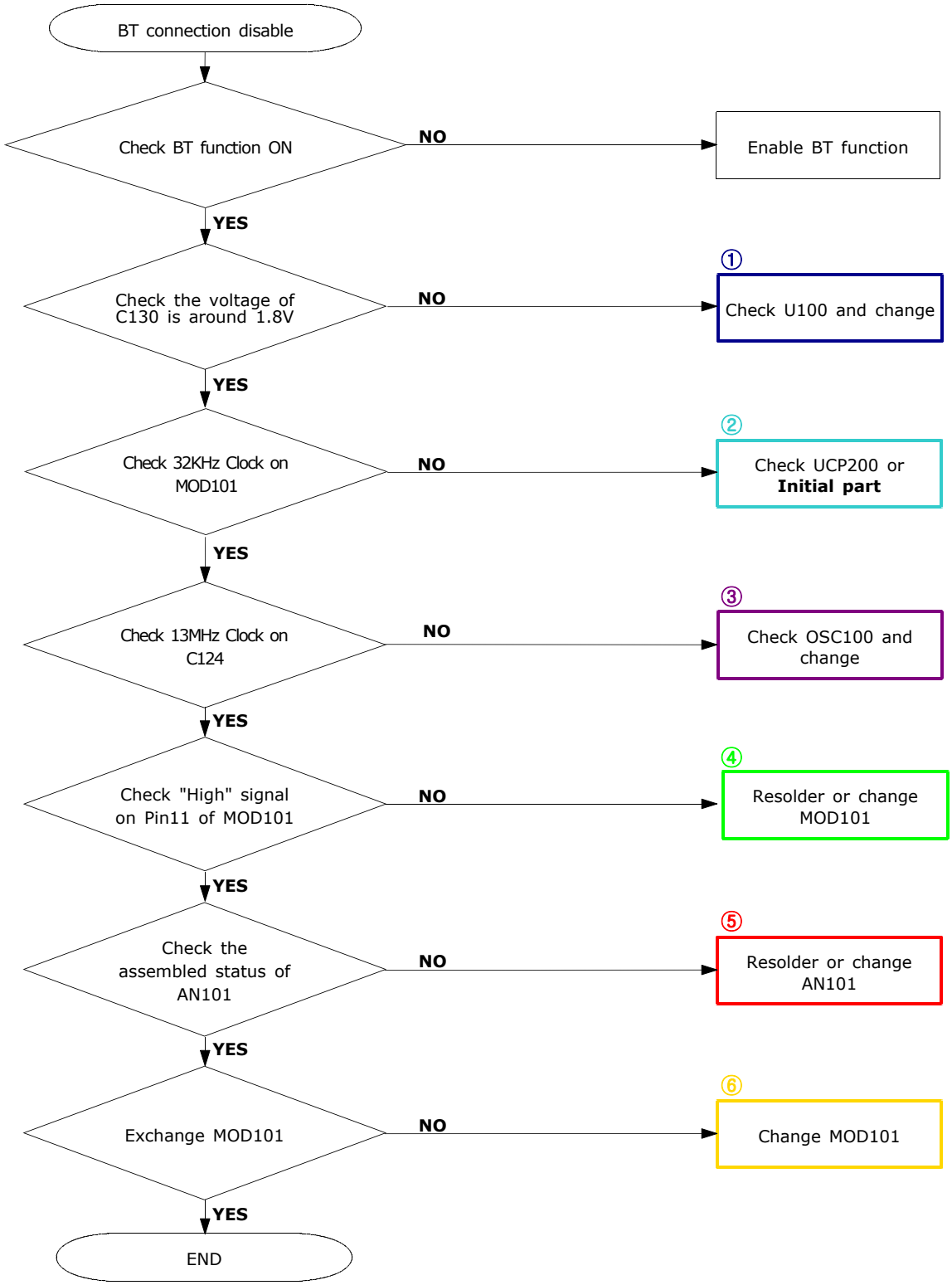

SAMSUNG Proprietary-Contents may change without notice
This Document can not be used without Samsung's authorization

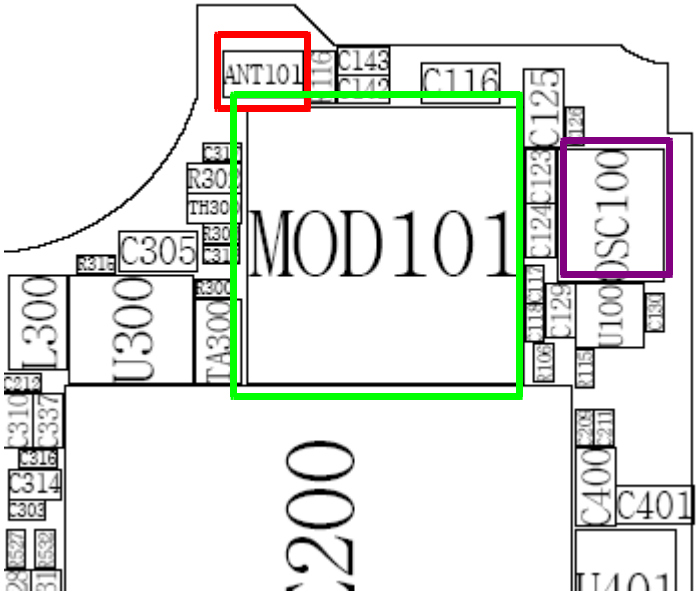

SAMSUNG Proprietary-Contents may change without notice
This Document can not be used without Samsung's authorization

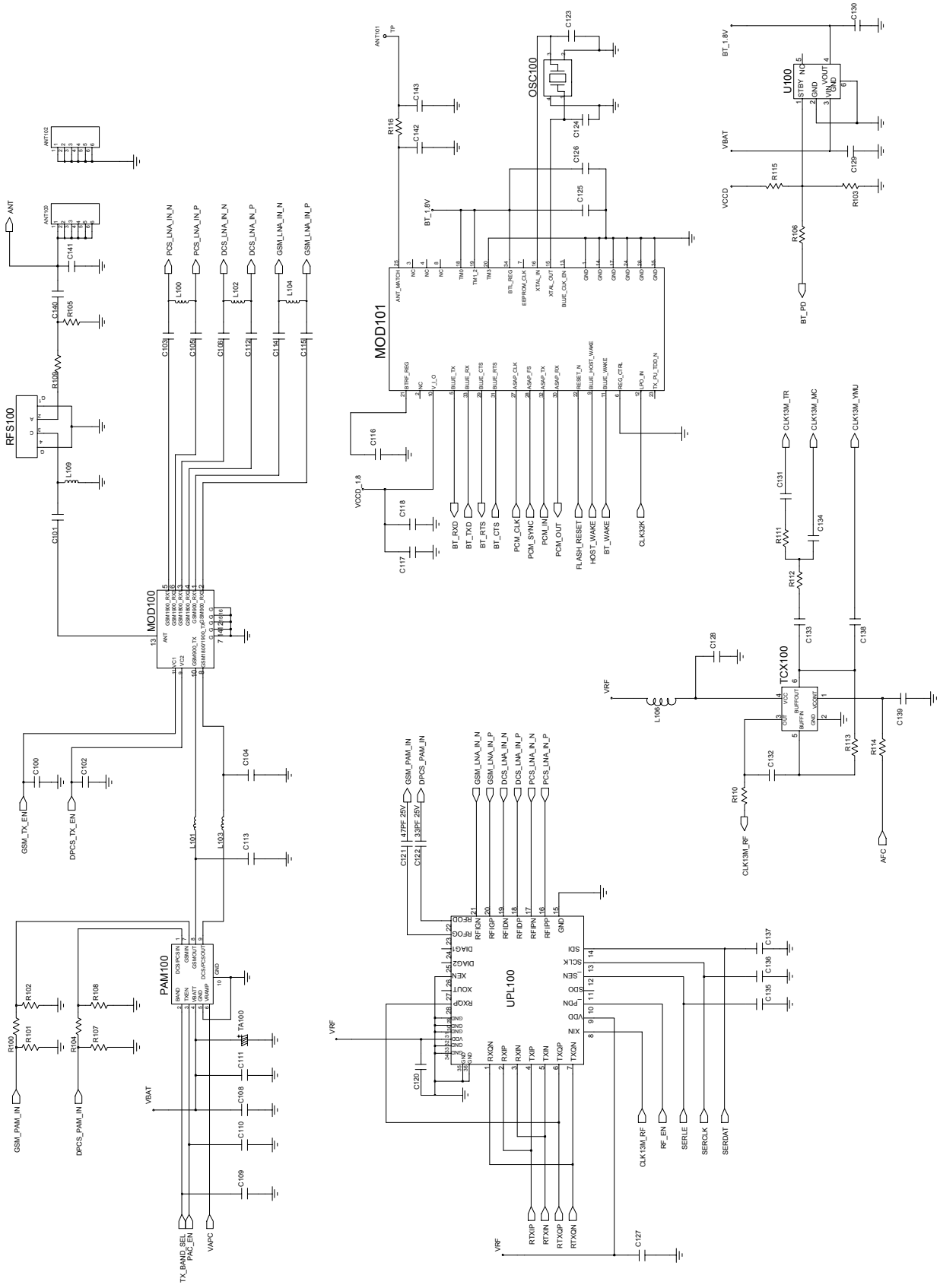

SAMSUNG Proprietary-Contents may change without notice
This Document can not be used without Samsung's authorization

3. SGH-P300 Exploded View and Parts List

3-1. Cellular phone Exploded View

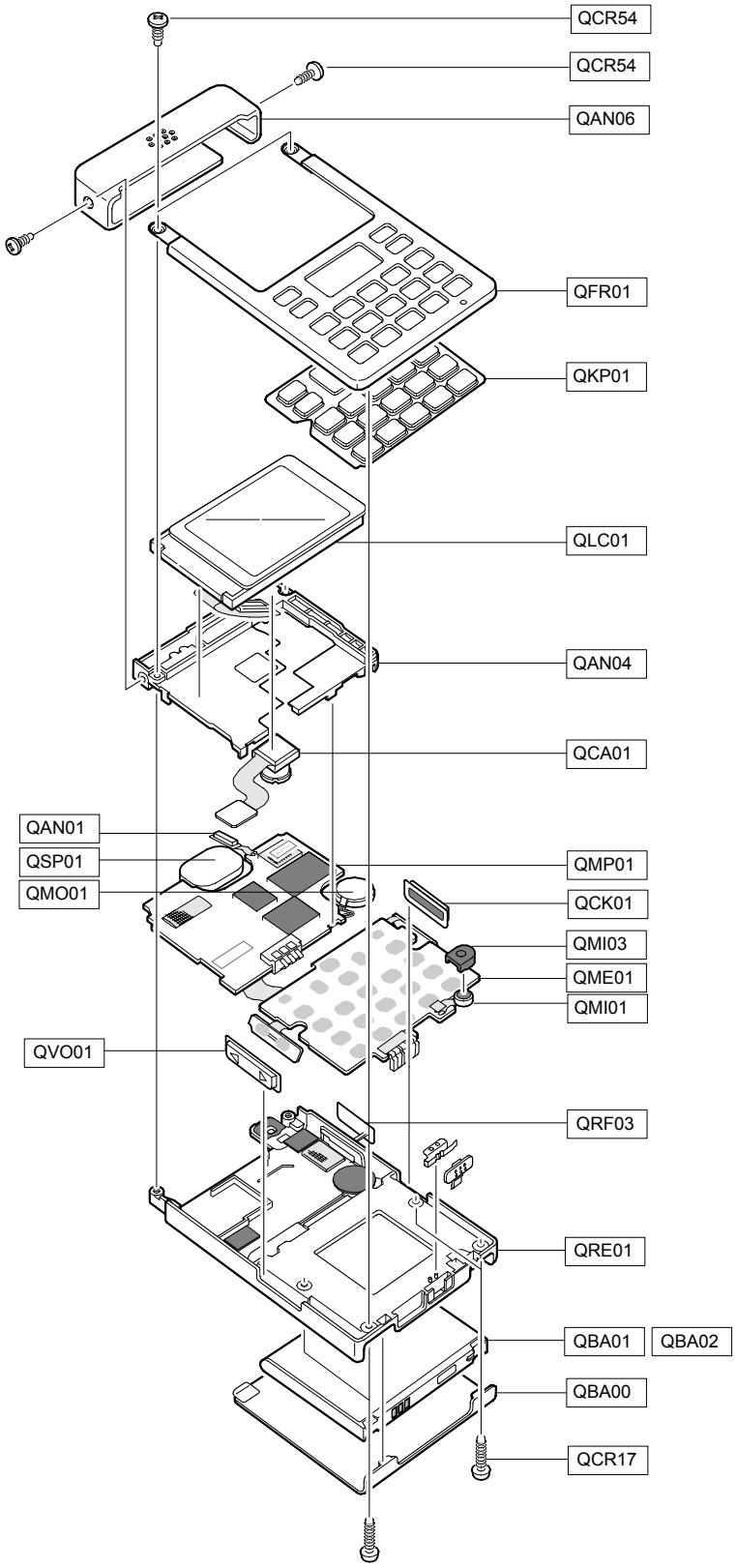

SAMSUNG Proprietary-Contents may change without notice
This Document can not be used without Samsung's authorization

3-2. Cellular phone Parts list

Design LOC		Discription	SEC Code
QAN01		ANTENNA-SGHP300	GH42-00655A
QAN04		MEC-INTENNA BRACKET	GH75-08141A
QAN06		PMO-INTENNA COVER V2	GH72-25058A
QBA00		NPR-BATT COVER	GH71-05607A
QBA01		INNER BATTERY PACK-800MAH,BLAC	GH43-02098A
QBA02		BATTERY-400MAH,BLK,ENG,M	GH43-02199A
QCA01		UNIT-CAMERA	GH59-02428A
QCK01		MEC-CAMERA KEY	GH75-08142A
QCR17		SCREW-MACHINE	6001-001460
QCR54		SCREW-MACHINE	6001-001645
QFR01		MEC-FRONT COVER	GH75-08138A
QKP01		MEC-KEYPAD MAIN	GH75-07517A
QLC01		LCD-SGHP300 MODULE	GH07-00775A
QMI03		MEC-CUSHION MIC RUBBER	GH75-08948A
QMO01		MOTOR DC-SGHP300	GH31-00203A
QMP01		PBA MAIN-SGHP300	GH92-02291A
QSP01		SPEAKER	3001-001832
QVO01		MEC-VOLUME KEY	GH75-08140A
QME01		UNIT-KEY FPCB ASSY	GH59-02492A
	QMI01	MICROPHONE-ASSY-SCHB340	GH30-00238A
QRE01		MEC-REAR COVER	GH75-08139A
	QRF03	PMO-EARJACK COVER V4	GH72-25063A

SAMSUNG Proprietary-Contents may change without notice
This Document can not be used without Samsung's authorization

Description	SEC CODE
BAG PE	6902-000297
CBF INTERFACE-DATA LINK CABLE	GH39-00444A
ADAPTOR-SGHD800 TA(EU)	GH44-01060A
S/W UTILITY-SAMSUNGPCSTUDIOII2	GH46-00138A
UNIT-EARPHONE	GH59-02499A
LABEL(P)-WATER SOAK	GH68-02026A
MANUAL-USER	GH68-08602A
LABEL(R)-MAIN (EU)	GH68-08694A
CUSHION-CASE TA2 MA2	GH69-03420A
BOX(P)-UNIT MAIN (EU)	GH69-03423A
BOX(P)-MASTER MAIN	GH69-03571A
MPR-BOHO VINYL M/WIN	GH74-11424A
MPR-BOHO VINYL IF	GH74-13606A
MPR-BOHO VINYL WINDOW 2	GH74-15506A
MPR-CUSHION REAR SHEET	GH74-20162A

SAMSUNG Proprietary-Contents may change without notice
This Document can not be used without Samsung's authorization

3-3. Test Jig (GH80-03307A)

3-3-1. RF Test Cable
(GH39-00283A)

3-3-2. DATA CABLE
(GH39-00444A)

3-3-3. Serial Cable

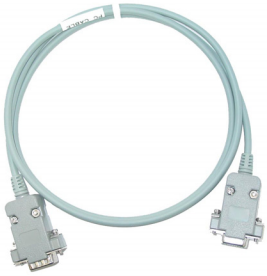

3-3-4. Power Supply Cable

3-3-5. Test Cable
(GH39-00304A)

3-3-6. TA
(GH44-01131A)

SAMSUNG Proprietary-Contents may change without notice
This Document can not be used without Samsung's authorization

SAMSUNG Proprietary-Contents may change without notice
This Document can not be used without Samsung's authorization

SAMSUNG Proprietary-Contents may change without notice
This Document can not be used without Samsung's authorization

4. SGH-P300 MAIN Electrical Parts List

SEC Code	Design LOC	Description	STATUS
0403-001427	ZD404	DIODE-ZENER	SA
0403-001547	ZD400	DIODE-ZENER	SA
0403-001547	ZD403	DIODE-ZENER	SA
0406-001190	ZD402	DIODE-TVS	SA
0406-001208	ZD401	DIODE-TVS	SA
0407-000115	D500	DIODE-ARRAY	SA
0504-001049	TR400	TR-DIGITAL	SA
0505-001325	TR401	FET-SILICON	SA
0801-002529	TR402	IC-CMOS LOGIC	SA
1001-001306	U500	IC-ANALOG MULTIPLEX	SA
1001-001306	U501	IC-ANALOG MULTIPLEX	SA
1108-000024	UME200	IC-MCP	SA
1201-002223	PAM100	IC-POWER AMP	SA
1201-002233	U503	IC-AUDIO AMP	SA
1203-003046	U401	IC-BATTERY	SA
1203-003109	U405	IC-BATTERY	SA
1203-003169	U504	IC-MULTI REG.	SA
1203-003275	U403	IC-MULTI REG.	SA
1203-003428	U301	IC-DC/DC CONVERTER	SA
1203-003432	U100	IC-POSI.FIXED REG.	SA
1203-003434	U300	IC-DC/DC CONVERTER	SA
1203-003565	UCP300	IC-POWER SUPERVISOR	SA
1203-003768	U502	IC-POSI.FIXED REG.	SA
1203-003901	U404	IC-PWM CONTROLLER	SA
1204-002138	UCD500	IC-MELODY	SA
1205-002272	U200	IC-TRANSCEIVER	SA
1205-002433	UPL100	IC-TRANSCEIVER	SA
1205-002612	UCD400	IC-CODEC	SA
1205-002613	UCD501	IC-CODEC	SA
1404-001165	TH300	THERMISTOR-NTC	SA
1405-001082	V200	VARISTOR	SA
1405-001082	V400	VARISTOR	SA
1405-001082	V401	VARISTOR	SA
2007-000171	R109	R-CHIP	SA
2007-000171	R116	R-CHIP	SA

SAMSUNG Proprietary-Contents may change without notice
This Document can not be used without Samsung's authorization

SEC Code	Design LOC	Description	STATUS
2007-000171	R408	R-CHIP	SA
2007-000171	R410	R-CHIP	SA
2007-000171	R502	R-CHIP	SA
2007-000171	R539	R-CHIP	SA
2007-000171	R540	R-CHIP	SA
2007-000171	R545	R-CHIP	SA
2007-000775	R514	R-CHIP	SA
2007-000775	R536	R-CHIP	SA
2007-001325	R519	R-CHIP	SA
2007-003025	R440	R-CHIP	SA
2007-003112	R400	R-CHIP	SA
2007-003112	R503	R-CHIP	SA
2007-003112	R507	R-CHIP	SA
2007-007107	R512	R-CHIP	SA
2007-007134	R501	R-CHIP	SA
2007-007134	R506	R-CHIP	SA
2007-007142	R518	R-CHIP	SA
2007-007142	R526	R-CHIP	SA
2007-007142	R528	R-CHIP	SA
2007-007142	R530	R-CHIP	SA
2007-007142	R531	R-CHIP	SA
2007-007192	R516	R-CHIP	SA
2007-007192	R517	R-CHIP	SA
2007-007308	R302	R-CHIP	SA
2007-007317	R523	R-CHIP	SA
2007-007317	R524	R-CHIP	SA
2007-007317	R535	R-CHIP	SA
2007-007489	R529	R-CHIP	SA
2007-007489	R534	R-CHIP	SA
2007-007528	R522	R-CHIP	SA
2007-007528	R525	R-CHIP	SA
2007-007528	R533	R-CHIP	SA
2007-007741	R310	R-CHIP	SA
2007-008045	R110	R-CHIP	SA
2007-008045	R311	R-CHIP	SA

SAMSUNG Proprietary-Contents may change without notice
This Document can not be used without Samsung's authorization

SEC Code	Design LOC	Description	STATUS
2007-008045	R513	R-CHIP	SA
2007-008047	R101	R-CHIP	SA
2007-008047	R102	R-CHIP	SA
2007-008052	R301	R-CHIP	SA
2007-008052	R304	R-CHIP	SA
2007-008055	R113	R-CHIP	SA
2007-008055	R201	R-CHIP	SA
2007-008055	R203	R-CHIP	SA
2007-008055	R305	R-CHIP	SA
2007-008055	R411	R-CHIP	SA
2007-008055	R414	R-CHIP	SA
2007-008055	R416	R-CHIP	SA
2007-008055	R418	R-CHIP	SA
2007-008055	R510	R-CHIP	SA
2007-008117	R417	R-CHIP	SA
2007-008419	R403	R-CHIP	SA
2007-008419	R407	R-CHIP	SA
2007-008419	R409	R-CHIP	SA
2007-008419	R413	R-CHIP	SA
2007-008419	R420	R-CHIP	SA
2007-008419	R421	R-CHIP	SA
2007-008420	R543	R-CHIP	SA
2007-008420	R544	R-CHIP	SA
2007-008478	R205	R-CHIP	SA
2007-008483	R202	R-CHIP	SA
2007-008483	R204	R-CHIP	SA
2007-008483	R300	R-CHIP	SA
2007-008483	R306	R-CHIP	SA
2007-008516	R114	R-CHIP	SA
2007-008516	R200	R-CHIP	SA
2007-008516	R415	R-CHIP	SA
2007-008531	R520	R-CHIP	SA
2007-008531	R521	R-CHIP	SA
2007-008542	R115	R-CHIP	SA
2007-008579	R107	R-CHIP	SA

SAMSUNG Proprietary-Contents may change without notice
This Document can not be used without Samsung's authorization

SEC Code	Design LOC	Description	STATUS
2007-008579	R108	R-CHIP	SA
2007-008588	R111	R-CHIP	SA
2007-008588	R401	R-CHIP	SA
2007-008588	R405	R-CHIP	SA
2007-008588	R406	R-CHIP	SA
2007-008808	R550	R-CHIP	SA
2007-009084	R402	R-CHIP	SA
2007-009084	R511	R-CHIP	SA
2007-009084	R515	R-CHIP	SA
2007-009111	R206	R-CHIP	SA
2007-009111	R207	R-CHIP	SA
2007-009115	R104	R-CHIP	SA
2007-009167	R303	R-CHIP	SA
2007-009170	R404	R-CHIP	SA
2007-009201	R100	R-CHIP	SA
2007-009206	R527	R-CHIP	SA
2007-009206	R532	R-CHIP	SA
2007-009211	R112	R-CHIP	SA
2203-000278	C124	C-CER,CHIP	SA
2203-000278	C143	C-CER,CHIP	SA
2203-000386	C213	C-CER,CHIP	SA
2203-000386	C214	C-CER,CHIP	SA
2203-000425	C131	C-CER,CHIP	SA
2203-000438	C529	C-CER,CHIP	SA
2203-000628	C123	C-CER,CHIP	SA
2203-000654	C515	C-CER,CHIP	SA
2203-000812	C538	C-CER,CHIP	SA
2203-000812	C539	C-CER,CHIP	SA
2203-000812	C541	C-CER,CHIP	SA
2203-000812	C546	C-CER,CHIP	SA
2203-000870	C142	C-CER,CHIP	SA
2203-000885	C526	C-CER,CHIP	SA
2203-001405	C516	C-CER,CHIP	SA
2203-002668	C113	C-CER,CHIP	SA
2203-002668	C141	C-CER,CHIP	SA

SAMSUNG Proprietary-Contents may change without notice
This Document can not be used without Samsung's authorization

SEC Code	Design LOC	Description	STATUS
2203-002677	C103	C-CER,CHIP	SA
2203-002677	C104	C-CER,CHIP	SA
2203-002677	C105	C-CER,CHIP	SA
2203-002677	C114	C-CER,CHIP	SA
2203-002677	C115	C-CER,CHIP	SA
2203-005393	C140	C-CER,CHIP	SA
2203-005552	C106	C-CER,CHIP	SA
2203-005552	C112	C-CER,CHIP	SA
2203-005682	C109	C-CER,CHIP	SA
2203-005682	C110	C-CER,CHIP	SA
2203-005682	C122	C-CER,CHIP	SA
2203-005682	C421	C-CER,CHIP	SA
2203-005682	C422	C-CER,CHIP	SA
2203-005682	C423	C-CER,CHIP	SA
2203-005682	C430	C-CER,CHIP	SA
2203-005682	C431	C-CER,CHIP	SA
2203-005682	C432	C-CER,CHIP	SA
2203-005682	C433	C-CER,CHIP	SA
2203-005682	C434	C-CER,CHIP	SA
2203-005682	C435	C-CER,CHIP	SA
2203-005682	C436	C-CER,CHIP	SA
2203-005682	C437	C-CER,CHIP	SA
2203-005719	C126	C-CER,CHIP	SA
2203-005736	C100	C-CER,CHIP	SA
2203-005736	C102	C-CER,CHIP	SA
2203-005736	C134	C-CER,CHIP	SA
2203-005736	C135	C-CER,CHIP	SA
2203-005736	C136	C-CER,CHIP	SA
2203-005736	C137	C-CER,CHIP	SA
2203-005736	C316	C-CER,CHIP	SA
2203-005736	C441	C-CER,CHIP	SA
2203-005736	C548	C-CER,CHIP	SA
2203-005736	C549	C-CER,CHIP	SA
2203-005779	C446	C-CER,CHIP	SA
2203-005779	C447	C-CER,CHIP	SA

SAMSUNG Proprietary-Contents may change without notice
This Document can not be used without Samsung's authorization

SEC Code	Design LOC	Description	STATUS
2203-005806	C449	C-CER,CHIP	SA
2203-005806	C450	C-CER,CHIP	SA
2203-006141	C401	C-CER,CHIP	SA
2203-006190	C536	C-CER,CHIP	SA
2203-006190	C537	C-CER,CHIP	SA
2203-006190	C544	C-CER,CHIP	SA
2203-006190	C545	C-CER,CHIP	SA
2203-006194	C108	C-CER,CHIP	SA
2203-006194	C117	C-CER,CHIP	SA
2203-006194	C132	C-CER,CHIP	SA
2203-006194	C133	C-CER,CHIP	SA
2203-006194	C138	C-CER,CHIP	SA
2203-006194	C139	C-CER,CHIP	SA
2203-006194	C203	C-CER,CHIP	SA
2203-006194	C204	C-CER,CHIP	SA
2203-006194	C207	C-CER,CHIP	SA
2203-006194	C208	C-CER,CHIP	SA
2203-006194	C211	C-CER,CHIP	SA
2203-006194	C212	C-CER,CHIP	SA
2203-006194	C301	C-CER,CHIP	SA
2203-006194	C303	C-CER,CHIP	SA
2203-006194	C318	C-CER,CHIP	SA
2203-006194	C319	C-CER,CHIP	SA
2203-006194	C414	C-CER,CHIP	SA
2203-006194	C540	C-CER,CHIP	SA
2203-006257	C337	C-CER,CHIP	SA
2203-006257	C444	C-CER,CHIP	SA
2203-006260	C524	C-CER,CHIP	SA
2203-006260	C525	C-CER,CHIP	SA
2203-006305	C415	C-CER,CHIP	SA
2203-006305	C416	C-CER,CHIP	SA
2203-006324	C116	C-CER,CHIP	SA
2203-006324	C125	C-CER,CHIP	SA
2203-006324	C304	C-CER,CHIP	SA
2203-006324	C400	C-CER,CHIP	SA

SAMSUNG Proprietary-Contents may change without notice
This Document can not be used without Samsung's authorization

SEC Code	Design LOC	Description	STATUS
2203-006379	C509	C-CER,CHIP	SA
2203-006379	C510	C-CER,CHIP	SA
2203-006399	C309	C-CER,CHIP	SA
2203-006399	C311	C-CER,CHIP	SA
2203-006399	C312	C-CER,CHIP	SA
2203-006399	C313	C-CER,CHIP	SA
2203-006399	C314	C-CER,CHIP	SA
2203-006399	C321	C-CER,CHIP	SA
2203-006399	C338	C-CER,CHIP	SA
2203-006399	C404	C-CER,CHIP	SA
2203-006399	C408	C-CER,CHIP	SA
2203-006399	C409	C-CER,CHIP	SA
2203-006399	C410	C-CER,CHIP	SA
2203-006399	C412	C-CER,CHIP	SA
2203-006399	C413	C-CER,CHIP	SA
2203-006399	C419	C-CER,CHIP	SA
2203-006399	C440	C-CER,CHIP	SA
2203-006399	C511	C-CER,CHIP	SA
2203-006399	C512	C-CER,CHIP	SA
2203-006399	C522	C-CER,CHIP	SA
2203-006399	C530	C-CER,CHIP	SA
2203-006399	C552	C-CER,CHIP	SA
2203-006399	C554	C-CER,CHIP	SA
2203-006399	C555	C-CER,CHIP	SA
2203-006399	C556	C-CER,CHIP	SA
2203-006399	C557	C-CER,CHIP	SA
2203-006423	C111	C-CER,CHIP	SA
2203-006423	C118	C-CER,CHIP	SA
2203-006423	C120	C-CER,CHIP	SA
2203-006423	C128	C-CER,CHIP	SA
2203-006423	C130	C-CER,CHIP	SA
2203-006423	C200	C-CER,CHIP	SA
2203-006423	C202	C-CER,CHIP	SA
2203-006423	C205	C-CER,CHIP	SA
2203-006423	C206	C-CER,CHIP	SA

SAMSUNG Proprietary-Contents may change without notice
This Document can not be used without Samsung's authorization

SEC Code	Design LOC	Description	STATUS
2203-006423	C209	C-CER,CHIP	SA
2203-006423	C210	C-CER,CHIP	SA
2203-006423	C216	C-CER,CHIP	SA
2203-006423	C233	C-CER,CHIP	SA
2203-006423	C300	C-CER,CHIP	SA
2203-006423	C302	C-CER,CHIP	SA
2203-006423	C320	C-CER,CHIP	SA
2203-006423	C406	C-CER,CHIP	SA
2203-006423	C407	C-CER,CHIP	SA
2203-006423	C411	C-CER,CHIP	SA
2203-006423	C420	C-CER,CHIP	SA
2203-006423	C438	C-CER,CHIP	SA
2203-006423	C439	C-CER,CHIP	SA
2203-006423	C445	C-CER,CHIP	SA
2203-006423	C448	C-CER,CHIP	SA
2203-006423	C503	C-CER,CHIP	SA
2203-006423	C505	C-CER,CHIP	SA
2203-006423	C514	C-CER,CHIP	SA
2203-006423	C518	C-CER,CHIP	SA
2203-006423	C519	C-CER,CHIP	SA
2203-006423	C520	C-CER,CHIP	SA
2203-006423	C521	C-CER,CHIP	SA
2203-006423	C527	C-CER,CHIP	SA
2203-006423	C531	C-CER,CHIP	SA
2203-006423	C547	C-CER,CHIP	SA
2203-006556	C101	C-CER,CHIP	SA
2203-006556	C121	C-CER,CHIP	SA
2203-006556	C217	C-CER,CHIP	SA
2203-006556	C218	C-CER,CHIP	SA
2203-006556	C219	C-CER,CHIP	SA
2203-006556	C220	C-CER,CHIP	SA
2203-006556	C221	C-CER,CHIP	SA
2203-006556	C222	C-CER,CHIP	SA
2203-006556	C223	C-CER,CHIP	SA
2203-006556	C224	C-CER,CHIP	SA

SAMSUNG Proprietary-Contents may change without notice
This Document can not be used without Samsung's authorization

SEC Code	Design LOC	Description	STATUS
2203-006556	C225	C-CER,CHIP	SA
2203-006556	C226	C-CER,CHIP	SA
2203-006556	C227	C-CER,CHIP	SA
2203-006556	C228	C-CER,CHIP	SA
2203-006556	C229	C-CER,CHIP	SA
2203-006556	C230	C-CER,CHIP	SA
2203-006556	C231	C-CER,CHIP	SA
2203-006556	C232	C-CER,CHIP	SA
2203-006562	C129	C-CER,CHIP	SA
2203-006562	C215	C-CER,CHIP	SA
2203-006562	C418	C-CER,CHIP	SA
2203-006562	C425	C-CER,CHIP	SA
2203-006562	C500	C-CER,CHIP	SA
2203-006562	C501	C-CER,CHIP	SA
2203-006562	C532	C-CER,CHIP	SA
2203-006562	C542	C-CER,CHIP	SA
2203-006562	C543	C-CER,CHIP	SA
2203-006636	C417	C-CER,CHIP	SA
2203-006648	C127	C-CER,CHIP	SA
2203-006648	C201	C-CER,CHIP	SA
2203-006648	C317	C-CER,CHIP	SA
2203-006648	C426	C-CER,CHIP	SA
2203-006825	C305	C-CER,CHIP	SA
2203-006825	C306	C-CER,CHIP	SA
2203-006838	C310	C-CER,CHIP	SA
2203-006838	C533	C-CER,CHIP	SA
2404-001268	TA500	C-TA,CHIP	SA
2404-001274	TA400	C-TA,CHIP	SA
2404-001339	TA501	C-TA,CHIP	SA
2404-001339	TA502	C-TA,CHIP	SA
2404-001352	TA503	C-TA,CHIP	SA
2404-001352	TA504	C-TA,CHIP	SA
2404-001380	TA401	C-TA,CHIP	SA
2404-001380	TA402	C-TA,CHIP	SA
2404-001394	C443	C-TA,CHIP	SA

SAMSUNG Proprietary-Contents may change without notice
This Document can not be used without Samsung's authorization

SEC Code	Design LOC	Description	STATUS
2404-001394	TA300	C-TA,CHIP	SA
2404-001394	TA403	C-TA,CHIP	SA
2404-001394	TA505	C-TA,CHIP	SA
2404-001394	TA506	C-TA,CHIP	SA
2404-001411	TA100	C-TA,CHIP	SA
2703-001231	L402	INDUCTOR-SMD	SA
2703-001512	L104	INDUCTOR-SMD	SA
2703-002205	L103	INDUCTOR-SMD	SA
2703-002532	L102	INDUCTOR-SMD	SA
2703-002547	L100	INDUCTOR-SMD	SA
2703-002734	L300	INDUCTOR-SMD	SA
2703-002734	L301	INDUCTOR-SMD	SA
2703-002785	L109	INDUCTOR-SMD	SA
2703-002880	L101	INDUCTOR-SMD	SA
2801-004225	OSC400	CRYSTAL-SMD	SA
2801-004373	OSC200	CRYSTAL-SMD	SA
2801-004426	OSC100	CRYSTAL-SMD	SA
2809-001284	TCX100	OSCILLATOR-VCTCXO	SA
2901-001308	F301	FILTER-EMI SMD	SA
2901-001308	F302	FILTER-EMI SMD	SA
2901-001308	F303	FILTER-EMI SMD	SA
2901-001308	F304	FILTER-EMI SMD	SA
2911-000010	MOD100	DUPLEXER-FEM	SA
3301-001659	L500	BEAD-SMD	SA
3301-001659	L501	BEAD-SMD	SA
3301-001806	L106	BEAD-SMD	SA
3705-001358	RFS100	CONNECTOR-COAXIAL	SA
3708-002171	SOC300	CONNECTOR-FPC/FFC/PIC	SA
3709-001391	SIM400	CONNECTOR-CARD EDGE	SA
3710-002306	IFC405	SOCKET-INTERFACE	SA
3711-005541	HDC401	HEADER-BOARD TO BOARD	SA
3711-005643	HDC400	HEADER-BOARD TO BOARD	SA
3711-006003	BTC400	CONNECTOR-BATTERY	SA
4302-001158	BAT300	BATTERY-LI(2ND)	SA
4709-001368	MOD101	BLUETOOTH MODULE	SA
GH09-00038A	UCP200	IC MICOM	SA
GH59-02475A	LED400	UNIT-PL FLASH	SA

SAMSUNG Proprietary-Contents may change without notice
This Document can not be used without Samsung's authorization

5. SGH-P300 PCB Diagrams

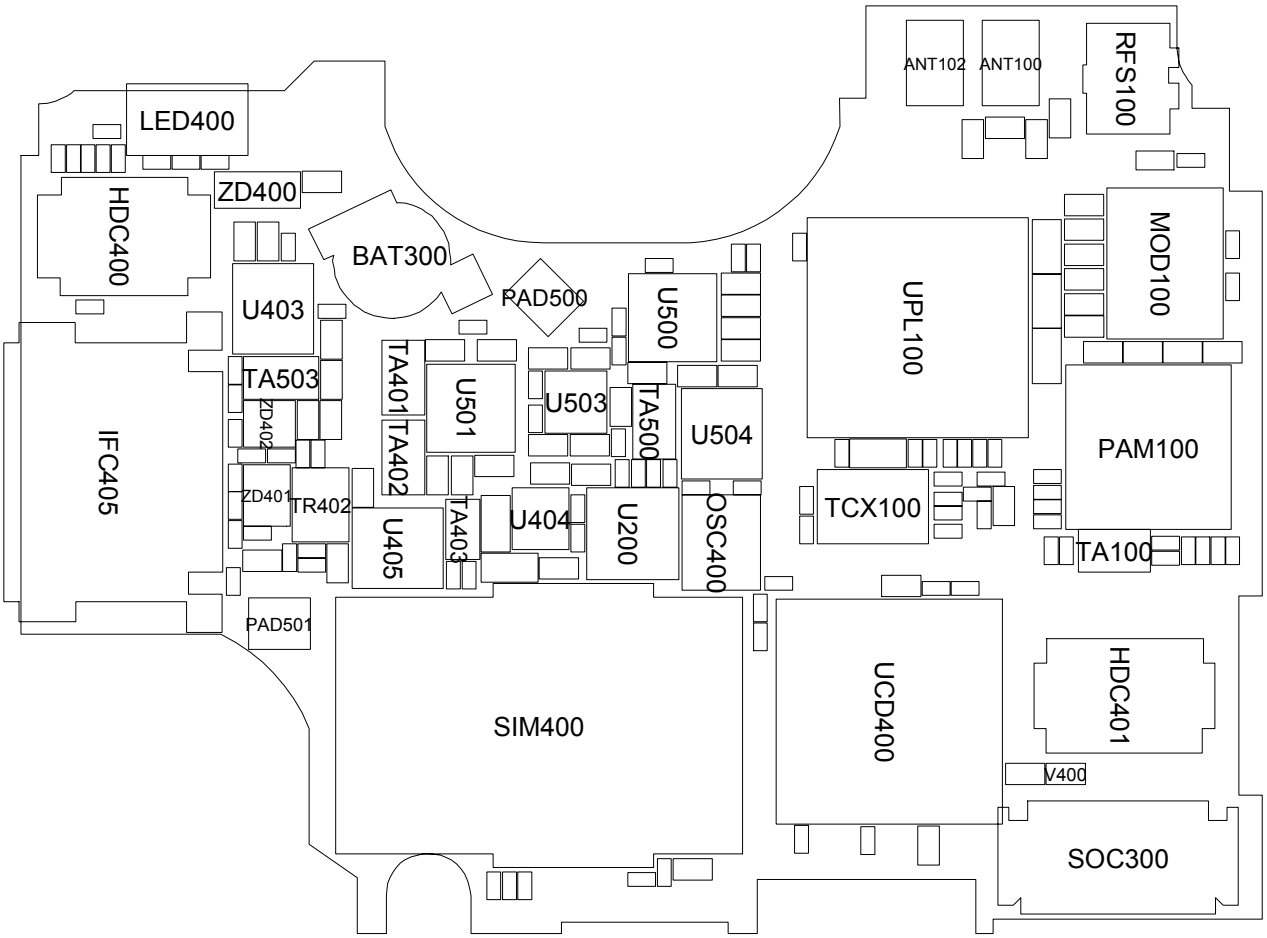

SAMSUNG Proprietary-Contents may change without notice
This Document can not be used without Samsung's authorization

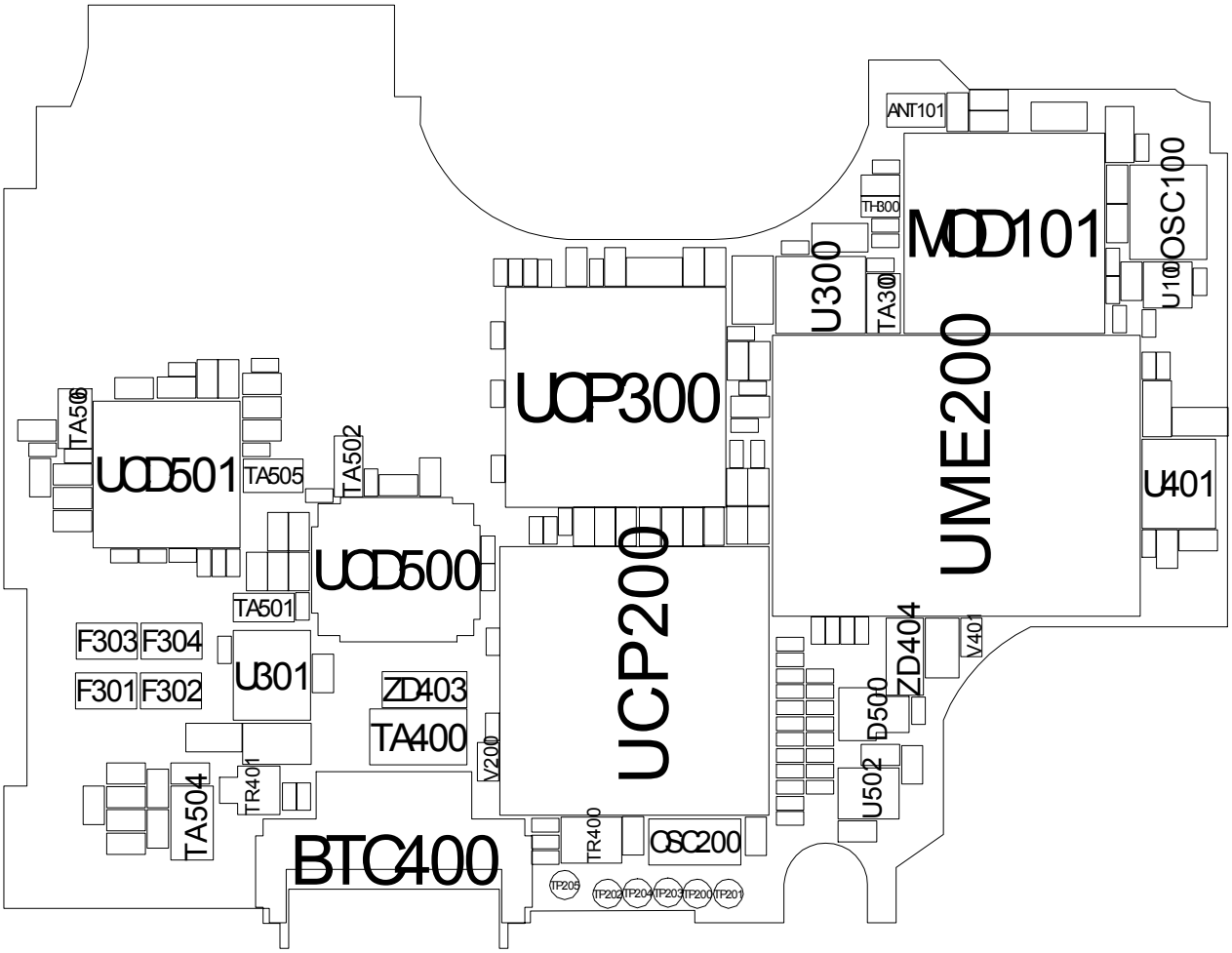

SAMSUNG Proprietary-Contents may change without notice
This Document can not be used without Samsung's authorization

6. SGH-P300 Block Diagrams

RF PART

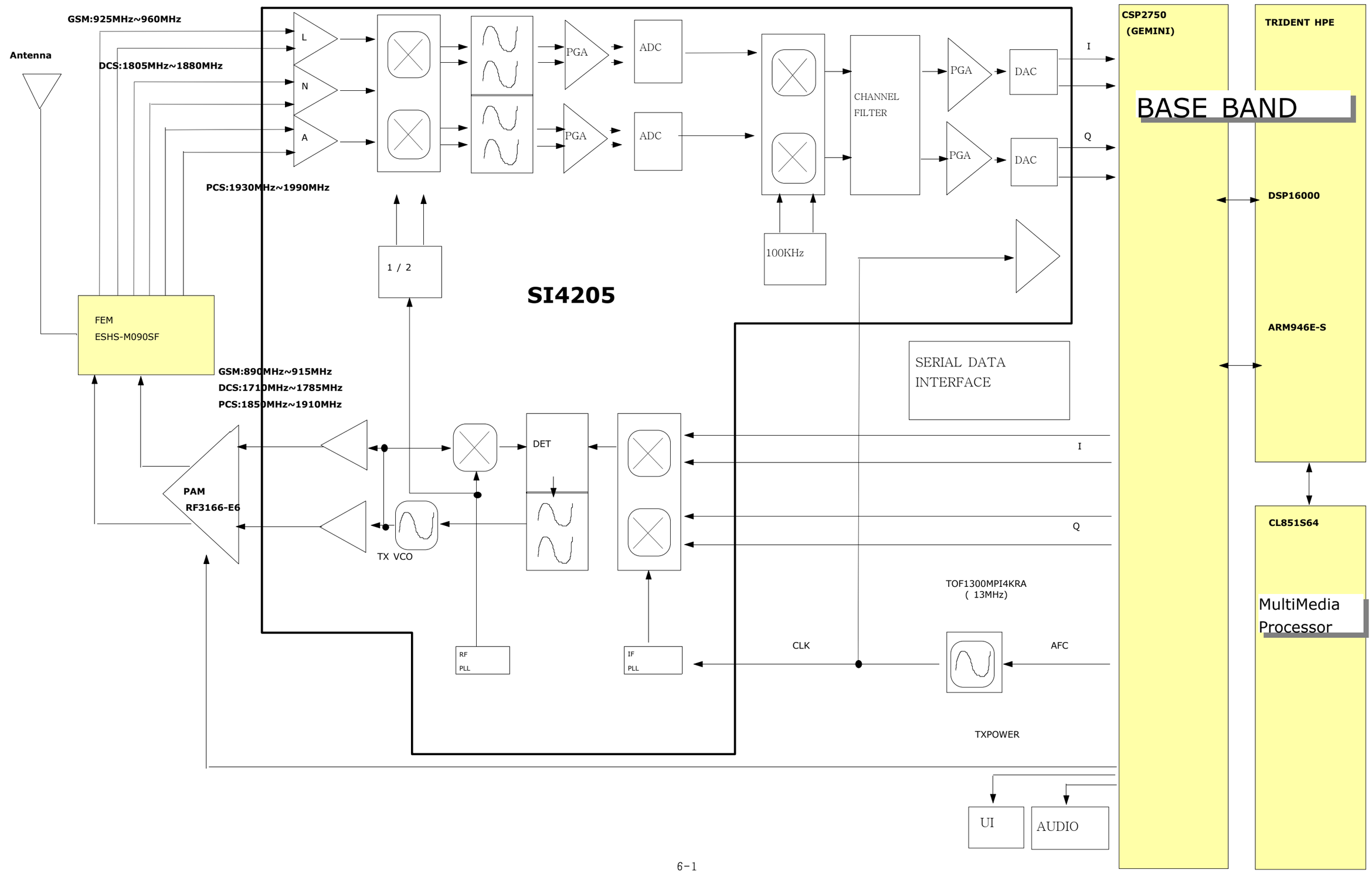

SAMSUNG Proprietary-Contents may change without notice
This Document can not be used without Samsung's authorization

BB PART

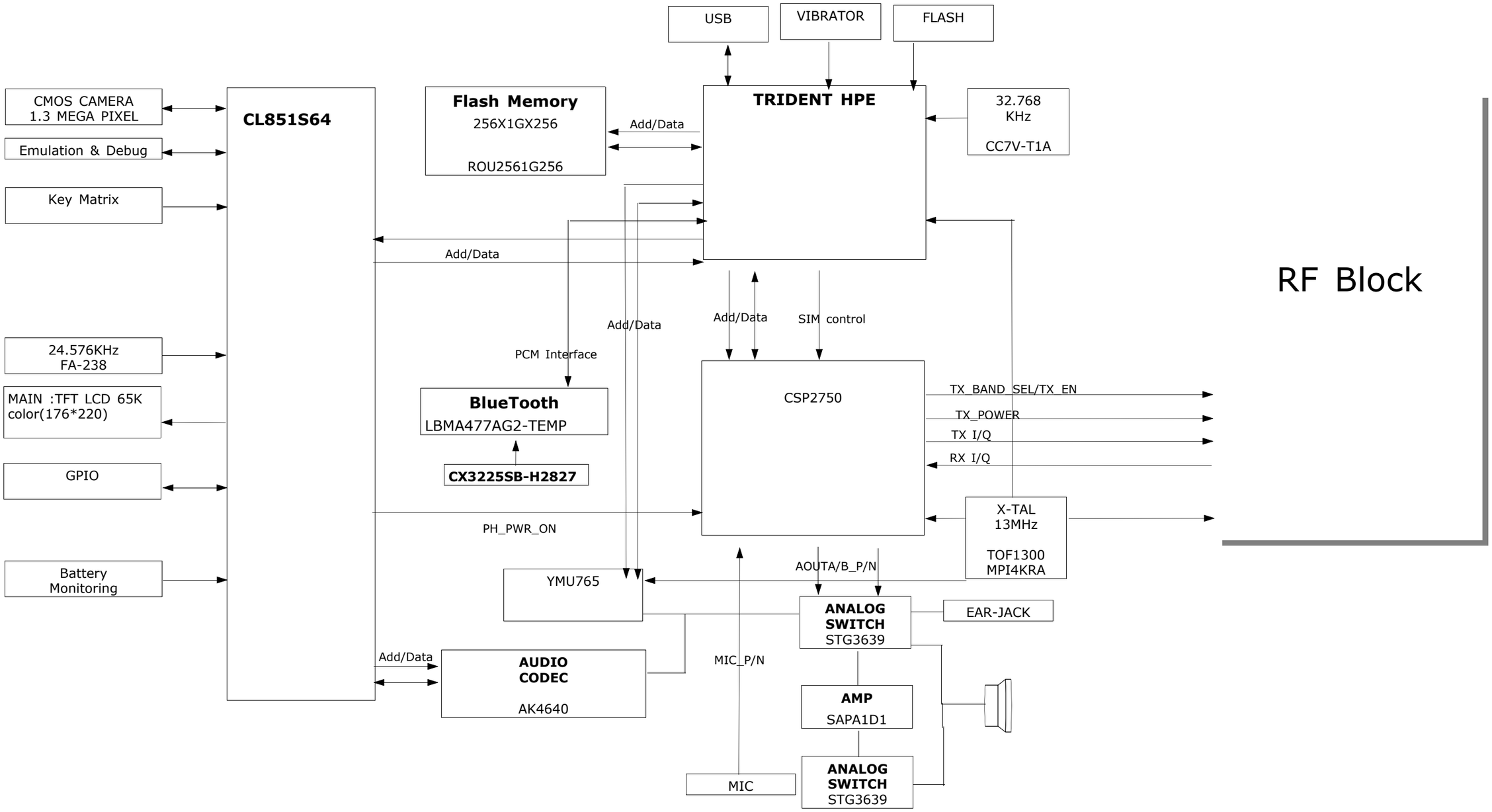

SAMSUNG Proprietary-Contents may change without notice
This Document can not be used without Samsung's authorization

SAMSUNG
ELECTRONICS

This Service Manual is a property of Samsung Electronics Co.,Ltd.
Any unauthorized use of Manual can be punished under applicable
International and/or domestic law.

©Samsung Electronics Co.,Ltd.

Code No.: GH68-07824A
2006. 01. Rev.1.0